ABBREVIATIONS

A, AMP	AMPERES
A.C.	ABOVE COUNTER
A.F.F.	ABOVE FINISHED FLOOR
AL	ALUMINUM CONDUCTOR OR BUS
AMOX	AMMONIA OXIDATION CATALYST
BD	BOARD
C	CONDUIT
CAB	CABINET
CATV	CABLE TELEVISION
CB	CIRCUIT BREAKER
CC	CENTER TO CENTER
CKT	CIRCUIT
CO	CONDUIT ONLY (EMPTY CONDUIT) WITH PULL WIRE
COPS	CRITICAL OPERATIONS POWER SYSTEM (CEC 708)
CPB	COMMUNICATIONS PULL BOX
CU	COPPER CONDUCTOR OR BUS
DB	DISTRIBUTION PANEL
DCOA	DESIGNATED CRITICAL OPERATIONS AREA
DEF	DIESEL EXHAUST FLUID
DOC	DIESEL OXIDATION CATALYST
DPF	DIESEL PARTICULATE FILTER
(E)	EXISTING
EM	EMERGENCY
EMT	ELECTRIC METALLIC TUBING
E.O.L.	END-OF-LINE
EPO	EMERGENCY POWER-OFF
EWC	ELECTRIC WATER COOLER
F	FUSE
F.A./FA	FIRE ALARM
FACP	FIRE ALARM CONTROL PANEL
F.B.O.	FURNISHED BY OTHER/FURNISHED BY OWNER
FLA	FULL LOAD AMPS
FMC	FLEXIBLE METALLIC CONDUIT
FS	FLOW SWITCH
G	GREEN GROUND WIRE
GFCI	GROUND FAULT CIRCUIT INTERRUPT
GND	GROUND
GRS	GALVANIZED RIGID STEEL
HC	HORIZONTAL CROSSCONNECT
HID	HIGH INTENSITY DISCHARGE
HP	HORSEPOWER
HPS	HIGH PRESSURE SODIUM
I.B.O.	INSTALLED BY OTHER
I.B.E.	INSTALLED AND CONNECTED BY ELECTRICAL CONTRACTOR
IDF	INTERMEDIATE DISTRIBUTION FRAME (DATA)
IG	ISOLATED GROUND
INT	INTRUSION ALARM
J/JB	JUNCTION BOX
KV	KILOVOLTS
KVA	KILOVOLTS-AMPERES
KW	KILOWATT
LFMC	LIQUIDTIGHT FLEXIBLE METALLIC CONDUIT
LCP	LIGHTING CONTROL PANEL
LTG	LIGHTING
LV	LOW VOLTAGE
MCC	MOTOR CONTROL CENTER
MTD	MOUNTED
MTG	MOUNTING
MLO	MAIN LUG ONLY
N	NEUTRAL
(N)	NEW
NL	NIGHT LIGHT
N.I.C.	NOT IN CONTRACT
N.T.S.	NOT TO SCALE
O.C./OC	ON CENTER
OFOI	OWNER FURNISHED OWNER INSTALLED
Ø	PHASE
P	POLE
P.A./PA	PUBLIC ADDRESS SYSTEM
PB	PULL BOX
PIV	POST INDICATOR VALVE
PNL	PANEL
PPB	POWER PULL BOX
REC/RECEPT.	RECEPTACLE
REF.	REFRIGERATOR
RELO	RELOCATABLE BUILDING/ PORTABLE BUILDING
RM	ROOM
RS	RAPID START
RU	RACK UNIT
SCE	SIGNAL CURRENT EXPANDER PANEL
SCR	SELECTIVE CATALYTIC REDUCTION
S.L.	SECURITY LIGHT
SCTB	SIGNAL AND COMMUNICATION TERMINAL BACKBOARD
SPB	SIGNAL PULL BOX
SPD	SURGE SUPPRESSION DEVICE
STB	SIGNAL TERMINAL BOARD
STC	SIGNAL TERMINAL CABINET
SW	SWITCH
TPB	TELEPHONE PULL BOX
TS	TAMPER SWITCH
TEL	TELEPHONE
TERM	TERMINAL
TYP	TYPICAL
TTB	TELEPHONE TERMINAL BOARD
TTC	TELEPHONE TERMINAL CABINET
U.C.	UNDER COUNTER
UG	UNDERGROUND
U.O.N.	UNLESS OTHERWISE NOTED
V	VOLTS/VOLTAGE
V.P.	VANDAL PROOF
W	WATTS
WP	WEATHERPROOF
WM	WIREMOLD

GENERAL NOTES

1. ALL WORK AND MATERIAL SHALL CONFORM TO LATEST CODES AND ORDINANCES. IT IS THE INTENTION OF THESE PLANS AND SPECIFICATIONS TO COVER ALL THINGS REQUIRED TO PROVIDE COMPLETE AND OPERATIVE SYSTEMS. THE CONTRACTOR SHALL FURNISH LABOR, MATERIAL, TRANSPORTATION, EQUIPMENT, MISCELLANEOUS SERVICES, ETC. REQUIRED TO ACCOMPLISH THIS RESULT. ANYTHING WHICH MAY BE REASONABLY CONSTRUED AS A NECESSARY PART OF THE INSTALLATION SHALL BE INCLUDED. NOTHING IN THESE PLANS OR SPECIFICATIONS MAY BE CONSTRUED TO PERMIT WORK NOT CONFORMING TO ANY CONSTRUCTION CODES.

2. ALL EQUIPMENT SHALL HAVE AN APPROVED, NATIONALLY RECOGNIZED TESTING LABORATORY LABEL ATTACHED (REFER TO THE FOLLOWING WEBSITE FOR APPROVED TESTING COMPANIES: https://www.osha.gov/dts/otpca/nrtl/its.html) AS PER N.E.C. 110. PROOF OF TESTING LABELS REQUIRED WITH ALL SUBMITTALS. THE CONTRACTOR SHALL BE RESPONSIBLE FOR ALL THESE REQUIREMENTS. THE CONTRACTOR SHALL NOTIFY THE ARCHITECT/ENGINEER PRIOR TO PURCHASING, IF ANY OF THE SPECIFIED MATERIAL FAILED THESE REQUIREMENTS. WHERE A FIELD CERTIFIED PRODUCT MAY BE REQUIRED FOR FIELD ASSEMBLED COMPONENT, PROVIDE CERTIFIED REPORT BY AN APPROVED TESTING AGENCY ACCEPTABLE TO THE AUTHORITIES HAVING JURISDICTION. INCLUDE ALL TESTING FEES IN BID.

3. THE ENGINEERING SERVICE ARE LIMITED TO PREPARATION OF PLANS AND SPECIFICATIONS. THE PLANS AND SPECIFICATIONS ARE INTENDED TO BE USED AS CONSTRUCTION GUIDELINES ONLY AND NOT THE TOTAL INSTRUMENT OF CONTRACT DOCUMENTS. IT IS NOT THE INTENTION OF ANY CONSTRUCTION PLANS TO DIVIDE WORK AMONG DIFFERENT TRADES. VERIFY SCOPE OF WORK WITH GENERAL CONTRACTOR/OWNER SINCE THE ENGINEER IS NOT SUPERVISING THE JOB. THE ENGINEER WILL PROVIDE INTERPRETATION OF THE CONSTRUCTION DOCUMENTS, BUT SUPERVISION IS UNDER THE RESPONSIBILITY OF THE OWNER OR HIS APPOINTEE.

4. WORKING CLEARANCE SHALL BE MAINTAINED AS PER C.E.C/N.E.C. FOR ALL PANEL(S), SERVICE EQUIPMENT, DISCONNECT SWITCH, ETC. LOCAL UTILITY COMPANY WORKING CLEARANCE REQUIREMENT SHALL ALSO BE OBSERVED. POWER EQUIPMENT MANUFACTURER'S PRODUCT MAY VARY IN DIMENSION. THE CONTRACTOR SHALL BE RESPONSIBLE FOR COORDINATION OF WORKING CLEARANCE REQUIREMENT WHEN LAYING OUT THE ELECTRICAL EQUIPMENT.

5. CONTRACTOR SHALL HAVE THE EQUIPMENT SUPPLIER PROVIDE THE ARC FAULT STUDIES OR RETAIN A THIRD PARTY TO PERFORM THE STUDIES. THE ARC FLASH WARNING LABELS SHALL BE PLACED ON ALL NEW ELECTRICAL DISTRIBUTION BOARDS, MAIN SWITCHBOARDS, TRANSFORMERS, PANELS, PANELBOARDS, DISCONNECTS, MCC'S ETC. PER CEC/NEC 110.16. LABELS SHALL BE PER ANSI Z535.4 GUIDELINES. THE LABEL SHALL LIST A MAXIMUM ARC FLASH INCIDENT ENERGY AT DISTANCES FROM THE EQUIPMENT FOR THE SYSTEM VOLTAGE AND THE APPROPRIATE PERSONAL PROTECTION EQUIPMENT REQUIRED.

6. THE CONTRACTOR SHALL VERIFY EXACT LOCATION OF TERMINAL BOXES AND CONDUIT ENTRANCES OF ALL EQUIPMENT AGAINST SHOP DRAWINGS BEFORE STUBBING UP CONDUITS OR PENETRATING EXTERIOR WALL(S) OF BUILDING(S).

7. IN CASE OF INTERFERENCE BETWEEN ELECTRICAL EQUIPMENT SHOWN ON THE DRAWINGS AND OTHER EQUIPMENT, THE CONTRACTOR SHALL NOTIFY THE ENGINEER IN WRITING BEFORE PROCEEDING.

8. ALL OUTDOOR DEVICES SHALL BE WEATHERPROOF.

9. ONLY MAJOR PULL BOXES ARE SHOWN. CONTRACTOR SHALL PROVIDE ADDITIONAL PULL BOXES WHERE THEY ARE REQUIRED TO MAKE A WORKABLE INSTALLATION. ALL PULL BOXES ABOVE GROUND SHALL BE PAD LOCKABLE. ALL PULL BOXES UNDERGROUND SHALL HAVE HOLD DOWN BOLTS AND BE TRAFFIC RATED.

10. MARK ALL PANELS WITH WHITE ACRYLIC NAMEPLATES WITH BLACK FACE FOR NORMAL SYSTEM AND RED FACE FOR EMERGENCY SYSTEM. ENGRAVE THE NAME AND SOURCE OF POWER INTO THE NAMEPLATE WITH 3/16" MINIMUM ARIAL FONT. PROVIDE TYPE WRITTEN PANEL SCHEDULE AT ALL PANELS.

11. CONTRACTOR SHALL FURNISH ALL MATERIALS, TOOLS, LABOR, EQUIPMENT AND SUPERVISION NECESSARY TO COMPLETE INSTALLATION, CHECKOUT AND INITIAL OPERATION.

12. CONTRACTOR SHALL VERIFY ALL DIMENSIONS AND GENERAL ARRANGEMENT OF EQUIPMENT SHOWN AND SHALL SUBMIT SHOP DRAWINGS FOR ALL EQUIPMENT PRIOR TO PURCHASE.

13. CAUTION SHOULD BE USED WHEN EXCAVATING OR TRENCHING TO LOCATE EXISTING UNDERGROUND CONDUITS. COORDINATE WITH AGENCIES SUCH AS UNDERGROUND SERVICE ALERT PRIOR TO EXCAVATION.

14. THE CONTRACTOR SHALL BE RESPONSIBLE FOR HAVING VISITED THE SITE AND SATISFIED HIMSELF AS TO THE CONDITIONS UNDER WHICH THE WORK IS TO BE PERFORMED. THE CONTRACTOR SHALL CHECK ALL OF THE CONDITIONS WHICH MAY AFFECT HIS WORK. THE SITE VISIT SHALL BE MADE PRIOR TO SUBMITTING THE BID. BIDDERS SHALL PREARRANGE A SITE VISIT WITH THE OWNER/ARCHITECT.

15. THE CONTRACTOR SHALL OBTAIN A FULL SET OF PLANS WHEN BIDDING THE JOB.

16. ALL PHASE CONDUCTORS SHALL HAVE THEIR OWN NEUTRALS. NO SHARING OF NEUTRALS ALLOWED.

17. ISOLATED GROUNDING CONDUCTORS WHERE INDICATED FOR RECEPTACLES SHALL BE SIZED TO MATCH THE EQUIPMENT GROUNDING CONDUCTOR SIZE AND INSTALLED AND CONNECTED ONLY TO THE RECEPTACLES REQUIRED TO BE CONNECTED TO THE ISOLATED GROUNDING SYSTEM AND GROUNDED AT THE MAIN GROUNDING BUS WITHIN THE THE PANEL OF CIRCUIT ORIGIN. THE ISOLATED GROUNDING CONDUCTOR SHALL NOT BE CONNECTED TO ANY OTHER GROUNDING SYSTEM ALONG IT'S PATH.

18. ALL EXTERIOR RECEPTACLES SHALL BE GFCI TYPE WITH A LOCKING, WEATHERPROOF IN-USE COVER.

19. PROVIDE AND INSTALL A PLAQUE AT EACH MAIN SWITCHBOARD DISCONNECTING MEANS AND BUILDING SERVICE DISCONNECTING MEANS PER NEC 225.37.

20. ALL PROVIDE A LABEL ON THE MAIN ELECTRICAL SERVICE EQUIPMENT INDICATING THE AVAILABLE FAULT CURRENT AT THE SERVICE.

21. ALL DISCONNECTS SHALL BE READILY ACCESSIBLE AND IN SIGHT OF THE EQUIPMENT, PER CALIFORNIA ELECTRICAL CODE. IF THE DISCONNECTING MEANS CANNOT BE LOCATED WITHIN SIGHT OF THE EQUIPMENT SERVED, IT SHALL HAVE THE CAPABILITY OF BEING LOCKED IN THE OPEN POSITION.

22. A LICENSED ELECTRICIAN SHALL BE PRESENT ON THE PROJECT WHENEVER ELECTRICAL WORK IS IN PROGRESS. AN ELECTRICAL CONTRACTOR IS NOT EXEMPT FROM THIS REQUIREMENT AND SHALL ALSO BE CERTIFIED IF HE IS WORKING AS THE RESPONSIBLE PROJECT ELECTRICIAN. VIOLATION OF THIS REQUIREMENT BY EITHER ELECTRICIANS OR WORKING CONTRACTORS SHALL BE REPORTED TO THE STATE LICENSE CONTRACTOR BOARD AS REQUIRED UNDER THE EXISTING LABOR CODE SECTION 108.2. NO VOLUNTEERS ARE ALLOWED TO PERFORM WORK ON THIS PROJECT AND ALL CITY INSURANCE REQUIREMENTS MUST BE MET PRIOR TO PERFORMING ANY WORK.

23. ALL CONDUCTORS IN STALLED IN UNDERGROUND OR WET LOCATIONS SHALL BE LISTED FOR WET LOCATIONS AND MARKED WITH "W" PER CEC.

24. ALL OUTDOOR ENCLOSURES SHALL HAVE LOCKING HASP. INCLUDING, BUT NOT LIMITED TO SWITCHBOARDS, DISCONNECTS, ENCLOSURES, ETC. THE CITY WILL PROVIDE THEIR OWN KEYED LOCKS. OUTDOOR PANELS SHALL HAVE KEYED LOCKING MECHANISM KEYED PER CITY STANDARD.

25. THE CONTRACTOR SHALL COORDINATE THE WORK TO MINIMIZE THE TEMPORARY GENERATOR RENTAL TIME.

26. PROVIDE A WARNING SIGN PLACARD AT ALL TEMPORARY GENERATOR POINTS OF CONNECTIONS INDICATING THE FOLLOWING INFORMATION WHETHER :

    WARNING
    FOR CONNECTION OF SEPARATELY DERIVED
    (BONDED NEUTRAL) SYSTEMS ONLY

    OR

    WARNING
    FOR CONNECTION OF NON-SEPARATELY DERIVED
    (FLOATING NEUTRAL) SYSTEM ONLY

27. A GRAPHICAL SIGN OR GRAPHICAL PLACARD SHALL BE LOCATED AT THE SERVICE ENTRANCE MSB INDICATING THE TYPE AND LOCATION OF EACH ON-SITE GENERATOR

GENERATOR PERMIT NOTICE

1. THE CONTRACTOR SHALL PURCHASE AND INSTALL THE GENERATOR AS INDICATED WITHIN THESE PLANS INCLUDING ASSISTING THE SCHOOL DISTRICT WITH THE PURCHASING AND OBTAINING THE OPERATIONAL PERMIT FROM THE SAN JOAQUIN COUNTY VALLEY AIR POLLUTION CONTROL DISTRICT. THE SCHOOL DISTRICT TO REIMBURSE THE CONTRACTOR FOR THE PERMIT FEES.

STANDARD SYMBOL LEGEND

- $a SPST TOGGLE WALL SWITCH - 20A, 120/277V, `a' INDICATES CONTROL
- $2 DPST TOGGLE WALL SWITCH - 20A, 120/277V
- $3 3-WAY TOGGLE WALL SWITCH - 20A, 120/277V
- $4 4-WAY TOGGLE WALL SWITCH - 20A, 120/277V
- $M SPDT MOMENTARY CONTACT TOGGLE SWITCH - 20A, 120/277V
- $K SPST KEYED SWITCH - 20A, 120/277V
- $T THERMAL RATED SNAP SWITCH FOR CONTROLLING FRACTIONAL HORSEPOWER MOTORS.
- CEILING OR WALL MOUNTED JUNCTION BOX
- PULLBOX(S) - SIZE AND NUMBER AS INDICATED
- SINGLE RECEPTACLE - 20A, 120V & GROUND
- RECEPTACLE, DUPLEX - 20A, 120V & GROUND
- RECEPTACLE, DUPLEX CEILING MOUNTED
- RECEPTACLE, DUPLEX - WITH ONE-HALF SWITCHED/CONTROLLED
- W/P RECEPTACLE, DUPLEX - WITH GFCI PROTECTION IN WEATHERPROOF HOUSING
- RECEPTACLE, DUPLEX- WITH GFCI PROTECTION
- RECEPTACLE, 50A, 3-WIRE, 250V
- RECEPTACLE, DOUBLE DUPLEX - (2) 20A, 120V & GROUND
- RECEPTACLE, DOUBLE DUPLEX CEILING MOUNTED
- RECEPTACLE, DOUBLE DUPLEX WITH GFCI PROTECTION
- RECEPTACLE, FLUSH FLOOR BOX - CARPET PLATE WHERE REQUIRED.
- TELEPHONE OUTLET, FLUSH FLOOR BOX - CARPET PLATE WHERE REQUIRED.
- DATA OUTLET, FLUSH FLOOR BOX - CARPET PLATE WHERE REQUIRED.
- FLUSH, FLOOR MOUNTED DUPLEX RECEPTACLE, DATA JACK, AND TELEPHONE JACK.
- TELEPHONE OUTLET: PROVIDE & INSTALL 2-GANG BOX WITH 1" CONDUIT. STUB-UP INTO T-BAR CEILING. FOR HARD CEILINGS, RUN THE CONDUIT TO THE CABLE TERMINATION LOCATION INDICATED PER THE RISER DIAGRAM.
- DATA OUTLET: PROVIDE & INSTALL 2-GANG BOX WITH 1" CONDUIT. STUB-UP INTO T-BAR CEILING. FOR HARD CEILINGS, RUN THE CONDUIT TO THE CABLE TERMINATION LOCATION INDICATED PER THE RISER DIAGRAM.
- (5) (4/2) NUMBER IN PARENTHESIS INDICATES QUANTITY OF DEVICES. TYPICAL FOR ALL TYPES OF DEVICES.
- T TRANSFORMER
- FUSED DISCONNECT - MOTOR RATED. FURNISHED AND INSTALLED BY ELECTRICAL CONTRACTOR. SWITCHES TO BE FURNISHED WITH DUAL ELEMENT FUSES SIZED ACCORDING TO NAME PLATE DATA ON EQUIPMENT INSTALLED.
- UNFUSED DISCONNECT - MOTOR RATED, FURNISHED AND INSTALLED BY ELECTRICAL CONTRACTOR.
- VFD VARIABLE FREQUENCY DRIVE: FURNISHED, INSTALLED, AND CONNECTED BY ELECTRICAL CONTRACTOR UNLESS OTHERWISE NOTED.
- 5% LINE OR LOAD REACTOR
- DV/DT FILTER
- MAGNETIC MOTOR STARTER FURNISHED, INSTALLED AND CONNECTED BY ELECTRICAL CONTRACTOR UNLESS OTHERWISE NOTED.
- MOTOR - FURNISHED AND INSTALLED BY MECHANICAL CONTRACTOR AND CONNECTED BY ELECTRICAL CONTRACTOR.
- GROUND ROD - 3/4" DIAMETER x 10-FEET LONG COPPER CLAD
- TERMINAL CABINET - SURFACE OR FLUSH MOUNTED WITH FLAME RETARDANT PLYWOOD BACKBOARD
- PANELBOARD - SURFACE OR FLUSH MOUNTED
- DISTRIBUTION OR SWITCHBOARD
- NEUTRAL LINK
- TRANSFORMER
- GROUND WIRE WITH GREEN INSULATION SIZE PER N.E.C., U.O.N.
- CONDUIT CONCEALED IN WALL OR CEILINGS. PROVIDE NUMBER OF WIRES NECESSARY FOR BRANCH CIRCUIT, SWITCH LEGS, ETC. PROVIDE SEPARATE NEUTRALS FOR EACH PHASE WIRE. SIZE SHALL BE DETERMINED BY OCPD CONNECTED TO THE PHASE CONDUCTORS AND VOLTAGE DROP CONSIDERATIONS. ALL CONDUITS SHALL HAVE GROUND CONDUCTOR(S). SIZE CONDUIT PER NEC.
- #10 CONDUIT CONCEALED IN WALL OR CEILINGS. PROVIDE NUMBER OF WIRES NECESSARY FOR BRANCH CIRCUIT, SWITCH LEGS, ETC. PROVIDE SEPARATE NEUTRALS FOR EACH PHASE WIRE. SIZE SHALL BE DETERMINED BY OCPD CONNECTED TO THE PHASE CONDUCTORS AND VOLTAGE DROP CONSIDERATIONS. ALL CONDUITS SHALL HAVE GROUND CONDUCTOR(S). SIZE CONDUIT PER NEC. HASH MARKS INDICATE THE NUMBER OF CONDUCTORS AND THE ADJACENT NUMBER INDICATES CONDUCTOR SIZE.
- CONDUIT CONCEALED UNDERGROUND OR BELOW FLOOR, MINIMUM SIZE IS 3/4". PROVIDE NUMBER OF WIRES NECESSARY FOR BRANCH CIRCUIT, SWITCH LEGS, ETC. PROVIDE SEPARATE NEUTRALS FOR EACH PHASE WIRE. SIZE SHALL BE DETERMINED BY OCPD CONNECTED TO THE PHASE CONDUCTORS AND VOLTAGE DROP CONSIDERATIONS. ALL CONDUITS SHALL HAVE GROUND CONDUCTOR(S). SIZE CONDUIT PER NEC.
- #10 CONDUIT UNDERGROUND OR BELOW FLOOR, MINIMUM SIZE IS 3/4". PROVIDE NUMBER OF WIRES NECESSARY FOR BRANCH CIRCUIT, SWITCH LEGS, ETC. PROVIDE SEPARATE NEUTRALS FOR EACH PHASE WIRE. SIZE SHALL BE DETERMINED BY OCPD CONNECTED TO THE PHASE CONDUCTORS AND VOLTAGE DROP CONSIDERATIONS. ALL CONDUITS SHALL HAVE GROUND CONDUCTOR(S). SIZE CONDUIT PER NEC. HASH MARKS INDICATE THE NUMBER OF CONDUCTORS AND THE ADJACENT NUMBER INDICATES CONDUCTOR SIZE.
- CONDUIT- UP
- CONDUIT-DOWN
- M METER
- PORTABLE GENERATOR INTERCONNECTION
- MOMENTARY CONTACT MUSHROOM HEAD PUSHBUTTON WITH ONE NORMALLY OPEN AND ONE NORMALLY CLOSED CONTACT
- TM THERMOSTAT PROBE
- SURGE SUPPRESSION DEVICE
- PROVIDE AND INSTALL JUNCTION BOX AND SURVEILLANCE CAMERA; REFER TO SPECIFICATIONS AND ELECTRICAL DETAILS. RUN 1" CONDUIT AND CAT-6a CABLE TO NEAREST IDF OR MDF. MAKE ALL CONNECTIONS FOR A FULLY FUNCTIONAL SYSTEM.
- INTRUSION ALARM DOOR CONTACT PROVISION, SEE TYPICAL DETAILS.
- INTRUSION ALARM KEYPAD
- INTRUSION ALARM MOTION DETECTOR, AIM AS INDICATED ON PLANS.
- CIRCUIT INTERCONNECTION
- GROUND
- 100A 3P C CIRCUIT BREAKER - EXAMPLE SHOWS A 100A/3P, TRIP CURVE C CIRCUIT BREAKER
- ST SHUNT TRIP
- EXISTING ABOVE GROUND CONDUIT
- EXISTING UNDERGROUND CONDUIT
- PL PROPERTY LINE
- EXISTING METAL WIRE-WAY. MOUNTED ON WALL, 48-INCHES ABOVE FINISHED FLOOR.
- WIREMOLD RACEWAY VERTICAL RUNS. PROVIDE ALL ELBOWS, FITTINGS, AND CONNECTORS AS NECESSARY FOR A COMPLETE RACEWAY SYSTEM.
- NEW ELECTRICAL EQUIPMENT
- EXISTING ELECTRICAL EQUIPMENT TO REMAIN
- EXISTING ELECTRICAL EQUIPMENT TO BE DEMOLISHED
- # SHEET NOTE NUMBER - #, SEE NOTE DESCRIPTION ON SAME SHEET.
- # GENERAL NOTE NUMBER - #, SEE NOTE DESCRIPTION ON SAME SHEET.
- # / # REFERENCE TO PLAN/DETAIL/DIAGRAM
- X Y DESIGNATES SIZE (X) AND QUANTITY (Y) OF FEEDERS, SEE FEEDER SCHEDULE
- # ADDENDUM OR REVISION NUMBER, SEE DESCRIPTION ON SAME SHEET.
- RELAY COIL
- TD TIME DELAY RELAY COIL
- L LATCHING RELAY COIL LATCH INPUT
- U LATCHING RELAY COIL UNLATCH INPUT
- NORMALLY CLOSED CONTACT, OPEN ON SIGNAL ENERGIZATION, DELAY CLOSE ON SIGNAL DE-ENERGIZATION
- NORMALLY OPEN CONTACT, CLOSE ON SIGNAL ENERGIZATION, DELAY OPEN ON SIGNAL DE-ENERGIZATION
- NORMALLY CLOSED CONTACT, DELAY OPEN ON SIGNAL ENERGIZATION, CLOSE ON SIGNAL DE-ENERGIZATION
- NORMALLY OPEN CONTACT, DELAY CLOSE ON SIGNAL ENERGIZATION, OPEN ON SIGNAL DE-ENERGIZATION
- NORMALLY CLOSED CONTACT
- NORMALLY OPEN CONTACT
- NORMALLY CLOSED LEVEL SWITCH, OPEN ABOVE SET POINT
- NORMALLY OPEN LEVEL SWITCH, OPEN BELOW SET POINT
- NORMALLY CLOSED LIMIT SWITCH
- NORMALLY OPEN LIMIT SWITCH
- NORMALLY CLOSED PRESSURE SWITCH, OPEN ABOVE SET POINT
- NORMALLY OPEN PRESSURE SWITCH, CLOSE ABOVE SET POINT
- NORMALLY CLOSED TEMPERATURE SWITCH, OPEN ABOVE SET POINT
- NORMALLY OPEN TEMPERATURE SWITCH, CLOSE ABOVE SET POINT
- NORMALLY CLOSED MOISTURE SWITCH, OPEN ABOVE SET POINT
- NORMALLY OPEN MOISTURE SWITCH, CLOSE ABOVE SET POINT
- NORMALLY CLOSED, MOMENTARY PUSHBUTTON
- MOMENTARY CONTACT MUSHROOM HEAD PUSHBUTTON WITH ONE NORMALLY OPEN AND ONE NORMALLY CLOSED CONTACT
- M M M SELECTOR SWITCH (SHOWN WITH 3 POSITIONS AND 1 CONTACT FOR EACH POSITION), M = MAINTAINED, S = SPRING RETURN
- G PILOT LIGHT: A = AMBER, B = BLUE, G = GREEN, R = RED, W = WHITE, Y = YELLOW
- PUMP
- AFR ARC FLASH RELAY

ELECTRICAL SHEET INDEX

E1.01	SYMBOLS LEGEND, NOTES, ABBREVIATIONS AND REQUIREMENTS
E1.02	ELECTRICAL NOTES, REQUIREMENTS, LIGHTING & MECHANICAL SCHEDULES
E1.03	SINGLE LINE DIAGRAM, EQUIPMENT ATTRIBUTES & PANEL SCHEDULES
E2.01	ELECTRICAL AND FIRE ALARM SITE PLAN
E3.01	SERVER ROOM ELECTRICAL FLOOR PLANS
E3.02	ELECTRICAL ROOF PLANS
E3.03	FIRE ALARM FLOOR PLAN AND SYSTEM INFORMATION
E3.04	FIRE ALARM CALCULATIONS, VOLTAGE DROPS, AND DETAILS
E4.01	TYPICAL ELECTRICAL DETAILS
E4.02	TYPICAL ELECTRICAL DETAILS
E4.03	TYPICAL ELECTRICAL DETAILS
E5.01	OUTDOOR LIGHTING TITLE 24
E5.02	OUTDOOR LIGHTING TITLE 24

THESE PLANS ARE ACCOMPANIED WITH BOOK SPECIFICATIONS THAT FORM PART OF THE CONTRACT DOCUMENTS.

Borrelli & Associates, Inc.
Consulting Electrical Engineers
2032 N. Gateway Boulevard
Fresno, CA. 93727
Phone: 559-233-4138
http://www.borrelliengineering.com/
ca-bai@borrelliengineering.com
BAI# 20141

REGISTERED PROFESSIONAL ENGINEER JOHN BORRELLI No.E16390 Exp. 6/30/23 ELECTRICAL STATE OF CALIFORNIA

APPROVALS:
APPLICATION #

REGISTERED PROFESSIONAL ENGINEER RYAN W. CARLSON M34846 Exp. 6-30-22 MECHANICAL STATE OF CALIFORNIA

DATE: 05-14-21

MADERA UNIFIED SCHOOL DISTRICT
SERVER ROOM
1902 HOWARD ROAD
MADERA, CA. 93637

CDS #: 20-65243

REVISIONS

LAWRENCE ENGINEERING GROUP
7084 N. Maple Ave., Suite 101
(559) 431-0101
Fresno, CA 93720
FAX (559) 431-1582

TITLE: SYMBOLS LEGEND, NOTES, ABBREVIATIONS,

SHEET: E1.01

PROJECT 21052

APPROVALS:

APPLICATION #

TYPICAL WALL DEVICE MOUNTING HEIGHTS

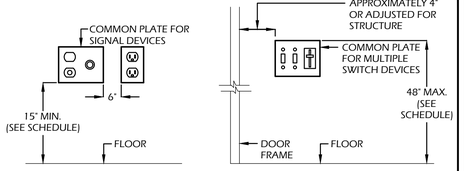

WALL DEVICES — SWITCH/DIMMER DEVICES

PLAN VIEW — PLAN VIEW

DEVICE TYPE	MOUNTING HEIGHT
SWITCHES	NO MORE THAN 48" A.F.F. TO TOP OF DEVICE
DIMMERS	NO MORE THAN 48" A.F.F. TO TOP OF DEVICE
RECEPTACLES	NO LESS THAN 15" A.F.F. TO BOTTOM OF DEVICE
TELEPHONE OUTLETS (OFFICE)	NO LESS THAN 15" A.F.F. TO BOTTOM OF DEVICE
TELEPHONE OUTLETS (CLASSROOMS)	NO MORE THAN 48" A.F.F. TO TOP OF DEVICE
DATA OUTLETS	NO LESS THAN 15" A.F.F. TO BOTTOM OF DEVICE
INTERCOM OUTLETS	NO LESS THAN 15" A.F.F. TO BOTTOM OF DEVICE
TELEVISION OUTLETS	NO LESS THAN 15" A.F.F. TO BOTTOM OF DEVICE
MICROPHONE OUTLETS	NO LESS THAN 15" A.F.F. TO BOTTOM OF DEVICE
RECEPTACLES, OUTLETS, SWITCHES, ETC. MOUNTED ABOVE COUNTERS	WITHIN THE REACH RANGES SPECIFIED IN SECTION 1138A.3 OF THE CALIFORNIA BUILDING CODE.
CLOCKS	AS SHOWN ON DRAWINGS
SPEAKERS	AS SHOWN ON DRAWINGS
HAND DRYERS	REFER TO ARCHITECTURAL PLANS
HAIR DRYERS	REFER TO ARCHITECTURAL PLANS
WALL SCONCES	ABOVE 80" FOR PROJECTIONS INTO CORRIDORS OF MORE THAN 4" OR AS SHOWN ON DRAWING
EXIT LIGHTS	SEE DETAILS
EXIT MARKERS	SEE DETAILS
EMERGENCY LIGHTING WALL PACK	AS SHOWN ON DRAWINGS
KEYPADS	NO MORE THAN 48" A.F.F. TO TOP OF DEVICE
WIREMOLD	MOUNTING HEIGHT SHALL BE SUCH THAT THE LOWEST DEVICE MOUNTED ON WIREMOLD IS AT 15" A.F.F. TO BOTTOM OF DEVICE, U.O.N.

NOTES:
1. ALL VERTICAL MEASUREMENTS ARE 'ABOVE FINISHED FLOOR' - (A.F.F.).
2. SEE DRAWINGS FOR NON-TYPICAL MOUNTING HEIGHTS.
3. WHERE MOUNTING HEIGHTS ARE NOT SHOWN, REFER TO ARCHITECTURAL PLANS.
4. RECEPTACLES, LIGHT SWITCHES, TELEPHONE-DATA OUTLETS AND OTHER RECESSED ELECTRICAL DEVICES THAT ARE SHOWN BACK-TO-BACK ON WALLS SEPARATING CORRIDORS, ROOMS AND OPEN AREAS SHALL BE SEPARATED HORIZONTALLY BY AT LEAST 24 INCHES. THIS REQUIREMENT IS TO SATISFY BOTH THE CONDITIONS AT FIRE RATED CORRIDORS AND SOUND TRANSMISSION FACTOR BETWEEN ALL CORRIDORS, ROOMS AND OPEN AREAS INCLUDING EXTERIOR WALLS.

ARC FLASH WARNING LABEL REQUIREMENTS

CONDITION 1: EXISTING EQUIPMENT WITHIN SCOPE OF THE PROJECT AND ALL NEW EQUIPMENT

1. ARC FLASH HAZARD HAZARD WARNING LABELS SHALL BE FIELD MARKED/PLACED ON ALL NEW AND EXISTING ELECTRICAL DISTRIBUTION BOARDS, SWITCHBOARDS, TRANSFORMERS, PANELS, PANELBOARDS, DISCONNECTS, & MOTOR CONTROL CENTERS THAT ARE WITHIN THE SCOPE OF THIS PROJECT PER CEC 110.16. LABELS SHALL BE APPLIED TO EXISTING EQUIPMENT WHERE NEW CONNECTIONS ARE MADE. THE LABELS SHALL MEET THE REQUIREMENTS OF 110.21(B) AND ANSI Z535.4-2011 GUIDELINES BY USING EFFECTIVE COLORS, SYMBOLS OR ANY COMBINATION THEREOF.

CONDITION 2: COMPLETELY NEW DISTRIBUTION SYSTEMS ONLY

1. ARC FLASH HAZARD WARNING LABELS FOR AN ENTIRELY NEW ELECTRICAL SERVICE AND DISTRIBUTION SYSTEMS SHALL BE UTILIZED AND ALL ELECTRICAL COMPONENTS OF THE DISTRIBUTION EQUIPMENT SHALL HAVE AN ARC FLASH WARNING LABEL WITH THE FOLLOWING INFORMATION:
   - 1.1. NOMINAL SYSTEM VOLTAGE
   - 1.2. ARC FLASH BOUNDARY
   - 1.3. MINIMAL ARC RATING OF CLOTHING
   - 1.4. EXACTLY ONE OF THE FOLLOWING:
     - 1.4.1. INCIDENT ENERGY & CORRESPONDING WORKING DISTANCE
     - 1.4.2. THE ARC FLASH PPE CATEGORY
2. THE LABELS SHALL MEET THE REQUIREMENTS OF CEC 110.21(B) AND ANSI Z535.4-2011 GUIDELINES BY USING EFFECTIVE COLORS, SYMBOLS OR ANY COMBINATION THEREOF.
3. THE CONTRACTOR SHALL HAVE THE EQUIPMENT MANUFACTURER PROVIDE THE REQUIRED LABELING OR OBTAIN THE SERVICES OF A THIRD PARTY OR THE ELECTRICAL ENGINEER OF RECORD.

CONDITION 3: NEW SERVICES

1. ARC FLASH HAZARD WARNING LABELS SHALL BE FIELD MARKED/PLACED ON ALL NEW SERVICE EQUIPMENT WITH THE FOLLOWING INFORMATION.
   - 1.1. NOMINAL SYSTEM VOLTAGE
   - 1.2. AVAILABLE FAULT CURRENT AT THE SERVICE OVERCURRENT PROTECTIVE DEVICES
   - 1.3. CLEARING TIME OF THE SERVICE OVERCURRENT PROTECTIVE DEVICES BASED ON THE AVAILABLE FAULT CURRENT AT THE SERVICE EQUIPMENT
   - 1.4. THE DATE THE LABEL WAS APPLIED
2. THE LABELS SHALL MEET THE REQUIREMENTS OF CEC 110.21(B) AND ANSI Z535.4-2011 GUIDELINES BY USING EFFECTIVE COLORS, SYMBOLS OR ANY COMBINATION THEREOF.

ELECTRICAL EQUIPMENT BRACING NOTES

ALL ELECTRICAL COMPONENTS SHALL BE ANCHORED AND INSTALLED PER THE DETAILS ON THE DSA APPROVED CONSTRUCTION DOCUMENTS. WHERE NO DETAIL IS INDICATED, THE FOLLOWING COMPONENTS SHALL BE ANCHORED OR BRACED TO MEET THE FORCE AND DISPLACEMENT REQUIREMENTS PRESCRIBED IN THE 2016 CBC SECTIONS 1616A AND ASCE 7-10 CHAPTERS 13, 26, AND 30.

1. ALL PERMANENT EQUIPMENT AND COMPONENTS.
2. TEMPORARY OR MOVABLE EQUIPMENT THAT IS PERMANENTLY ATTACHED (E.G. HARD WIRED) TO THE BUILDING UTILITY SERVICES SUCH AS ELECTRICITY, GAS, OR WATER.
3. MOVABLE EQUIPMENT WHICH IS STATIONED IN ONE PLACE FOR MORE THAN 8 HOURS AND HEAVIER THAN 400 POUNDS ARE REQUIRED TO BE ANCHORED WITH TEMPORARY ATTACHMENTS.

THE ATTACHMENT OF THE FOLLOWING ELECTRICAL COMPONENTS SHALL BE POSITIVELY ATTACHED TO THE STRUCTURE, BUT NEED NOT BE DETAILED ON THE PLANS. THESE COMPONENTS SHALL HAVE FLEXIBLE CONNECTIONS PROVIDED BETWEEN THE COMPONENT AND ASSOCIATED DUCTWORK, PIPING, AND CONDUIT.

A. COMPONENTS WEIGHING LESS THAN 400 POUNDS AND HAVING A CENTER OF MASS LOCATED 4 FEET OR LESS ABOVE THE ADJACENT FLOOR OR ROOF LEVEL THAT DIRECTLY SUPPORTS THE COMPONENT.
B. COMPONENTS WEIGHING LESS THAN 20 POUNDS, OR IN THE CASE OF DISTRIBUTED SYSTEMS, LESS THAN 5 POUNDS PER FOOT, WHICH ARE SUSPENDED FROM A ROOF OR FLOOR OR HUNG FROM A WALL

FOR THOSE ELEMENTS THAT DO NOT REQUIRE DETAILS ON THE APPROVED DRAWINGS, THE INSTALLATION SHALL BE SUBJECT TO THE APPROVAL OF THE STRUCTURAL ENGINEER OF RECORD AND THE DSA DISTRICT STRUCTURAL ENGINEER. THE PROJECT INSPECTOR WILL VERIFY THAT ALL COMPONENTS AND EQUIPMENT HAVE BEEN ANCHORED IN ACCORDANCE WITH THE ABOVE REQUIREMENTS.

ELECTRICAL EQUIPMENT NOTES

1. THE ELECTRICAL DRAWINGS ARE DIAGRAMMATIC AND INDICATE THE GENERAL ARRANGEMENT OF ELECTRICAL EQUIPMENT, DEVICES AND WIRING. SEE SECTION 260000 OF THE SPECIFICATIONS.
2. FOR THE EXACT LOCATION OF ELECTRICAL EQUIPMENT AND DEVICES SEE THE ARCHITECTURAL ELEVATIONS, DETAILS AND DIMENSIONS SHOWN ON THE DRAWINGS.

ELECTRICAL DUCTWORK ANCHORING NOTES

DUCTWORK AND ELECTRICAL DISTRIBUTION SYSTEMS SHALL BE BRACED TO COMPLY WITH THE FORCES AND DISPLACEMENTS PRESCRIBED IN ASCE 7-10 SECTION 13.3 AS DEFINED IN ASCE 7-10 SECTIONS 13.6.5.6, 13.6.7, AND 13.6.8, AND 2016 CBC SECTIONS 1616A.1.23 THROUGH 1616A.1.26.

THE BRACING AND ATTACHMENTS TO THE STRUCTURE SHALL BE DETAILED ON THE APPROVED DRAWINGS OR THEY SHALL COMPLY WITH ON OF THE OSHPD PRE-APPROVALS (OPM #) AS MODIFIED TO SATISFY ANCHORAGE REQUIREMENTS OF ACI 318, APPENDIX D.

COPIES OF THE MANUAL SHALL BE AVAILABLE ON THE JOBSITE PRIOR TO THE START OF HANGING AND BRACING OF THE PIPE, DUCTWORK, AND ELECTRICAL DISTRIBUTION SYSTEMS.

THE STRUCTURAL ENGINEER OF RECORD SHALL VERIFY THE ADEQUACY OF THE STRUCTURE TO SUPPORT THE HANGER AND BRACE LOADS.

HILTI KWIK BOLT TZ NOTES

1. EXPANSION ANCHORS SHALL BE HILTI KWIK BOLT TZ AS MANUFACTURED BY HILTI, INC., 5400 SOUTH 122ND EAST AVENUE, TULSA, OKLAHOMA 74146. INSTALLATION SHALL BE IN ACCORDANCE WITH THE MANUFACTURER'S RECOMMENDATIONS AND I.C.C. REPORT NO. ESR-1917.
2. ULTIMATE TENSION VALUES SHALL BE AS FOLLOWS:
   - 2.1. FOR 3/8" DIAMETER BOLTS:
     - 2.1.1. MINIMUM EMBEDMENT: 2"
     - 2.1.2. MINIMUM DISTANCE FROM EDGE: 4-1/2"
     - 2.1.3. SPACING: 5"
     - 2.1.4. MINIMUM CONCRETE THICKNESS: 4"
     - 2.1.5. TENSION LOAD: 1600 POUNDS
     - 2.1.6. TORQUE TEST: 25 POUND-FEET
   - 2.2. FOR 1/2" DIAMETER BOLTS:
     - 2.2.1. MINIMUM EMBEDMENT: 3-1/4"
     - 2.2.2. MINIMUM DISTANCE FROM EDGE: 6"
     - 2.2.3. SPACING: 6"
     - 2.2.4. MINIMUM CONCRETE THICKNESS: 6-1/2"
     - 2.2.5. TENSION LOAD: 1600 POUNDS
     - 2.2.6. TORQUE TEST: 40 POUND-FEET
3. PLACEMENT GUIDELINES FOR ABOVE VALUES IN ITEM 2 REQUIRE THE FOLLOWING CONDITIONS:
   - 3.1. TABLE VALUES ARE BASED ON f'c = 3000 PSI
   - 3.2. HOLES DRILLED WITH A HAMMER DRILL AND CARBIDE BIT COMPLYING WITH ANSI B212.15-1994
   - 3.3. BIT DIAMETER EQUALS THE SIZE OF THE ANCHOR BEING INSTALLED
   - 3.4. HOLE DEPTH MUST EXCEED MINIMUM EMBEDMENT BY ONE BOLT DIAMETER
   - 3.5. ANY SEISMIC DESIGN CATEGORY PER 2013 C.B.C.
   - 3.6. TENSION LOAD VALUES SHALL BE MULTIPLIED BY 0.6 FOR LIGHTWEIGHT CONCRETE
   - 3.7. A.C.I. "CRACKED" CONCRETE CONDITION IS SUFFICIENT
   - 3.8. FOR CARBON OR STAINLESS STEEL BOLTS
4. WHEN INSTALLING EXPANSION ANCHORS IN EXISTING CONCRETE, USE CARE AND CAUTION TO AVOID CUTTING OR DAMAGING THE EXISTING REINFORCING BARS. MAINTAIN A MINIMUM CLEARANCE OF ONE-INCH BETWEEN THE EXISTING REINFORCEMENT AND THE EXPANSION ANCHOR.

GENERAL ANCHOR NOTES

1. POST-INSTALLED ANCHORS SHALL BE TESTED IN ACCORDANCE WITH 2013 CBC SECTION 1913A.7.
2. IF ANY ANCHOR FAILS TESTING, TEST ALL ANCHORS OF THE SAME TYPE, NOT PREVIOUSLY TESTED UNTIL TWENTY (20) CONSECUTIVE ANCHORS PASS, THEN RESUME THE INITIAL TEST FREQUENCY. IF THE ANCHORS ARE USED FOR THE SUPPORT AND BRACING OF NON-STRUCTURAL COMPONENTS (PIPE, DUCT OR CONDUIT), THE TWENTY (20) SHALL BE ONLY THOSE ANCHORS INSTALLED BY THE SAME TRADE. REFER TO NOTE 8 ON THE TEST VALUES TABLE (ATTACHED) FOR ACCEPTANCE/FAILURE CRITERIA.
3. REGARDLESS OF WHICH TEST METHOD IS CHOSEN BY THE CONSULTANT, TEST VALUES AND ALL APPROPRIATE CRITERIA SHALL BE SHOWN ON THE CONTRACT DOCUMENTS.
4. REFER TO CIVIL AND STRUCTURAL PLANS AND SPECIFICATIONS FOR FURTHER REQUIREMENTS.

CONCRETE SAMPLING NOTE

ALL CONCRETE POURS SHALL HAVE A MINIMUM OF FIVE CYLINDRICAL SAMPLES TAKEN AND REPORT OF THE POURED IN PLACE CONCRETE SHALL BE PROVIDED TO THE ENGINEER AND TO THE CITY FOR RECORDS. THE CONCRETE STRENGTH SHALL MEET OR EXCEED THE STRENGTH REQUIREMENTS AS INDICATED ON THE APPROVED PLANS.

DEMOLITION NOTES

1. THE DEMOLITION PLANS GENERALLY SHOW ALL EXISTING EQUIPMENT TO BE REMOVED.
2. EXISTING CONDUITS IN WALLS TO BE REMOVED SHALL BE CUT AND CAPPED FLUSH WITH FLOOR AND/OR CEILING. REMOVE CONDUCTORS BACK TO LAST DEVICE ON CIRCUIT REMAINING. INSTALL PULL ROPE.
3. THE CONTRACTOR SHALL IDENTIFY LOCATIONS OF ALL CAPPED CONDUITS, WHETHER CUT AND CAPPED AS PART OF THIS PROJECT OR A PREVIOUS PROJECT, ON ALL THE RECORD DRAWINGS.
4. IT IS THE RESPONSIBILITY OF THE CONTRACTOR TO MAINTAIN ELECTRICAL SERVICE TO ALL DEVICES DOWNSTREAM OF A DEVICE ABANDONED.
5. ALL ELECTRICAL DEVICES REMOVED THAT WILL NOT BE RELOCATED OR REPLACED SHALL HAVE ALL CONDUIT, CONDUCTORS, ETC. REMOVED BACK TO LAST DEVICE.
6. RELABEL ALL CIRCUITS THAT HAVE ALL LOADS REMOVED AS SPARE.
7. THE ELECTRICAL CONTRACTOR SHALL COORDINATE WITH THE OWNER PRIOR TO REMOVAL OF ANY ELECTRICAL EQUIPMENT. THE CONTRACTOR SHALL RETURN TO THE OWNER, IN THE AS-FOUND CONDITION, ANY EQUIPMENT THE OWNER REQUESTS BE RETURNED TO THE OWNER.
8. EXISTING CONDUIT MAY BE REUSED ONLY IF IT IS OF ADEQUATE SIZE AND IN GOOD CONDITION.
9. IF EXISTING EQUIPMENT REQUIRES RELOCATION, THE CONTRACTOR SHALL ENSURE THAT ALL EQUIPMENT IS OPERABLE, CONNECTED, AND DOES NOT POSE A HAZARD WHEN RELOCATED.
10. PATCH TO MATCH SURROUNDING SURFACE ANY HOLES CREATED BY REMOVING ANY EQUIPMENT, CONDUITS, ETC.
11. PANELS OR TERMINAL CABINETS IN WALLS TO BE REMOVED SHALL REMAIN OPERATIVE UNTIL ALL DEVICES FED FROM THE PANEL OR TC ARE REMOVED (IF APPLICABLE) OR NEW LOCATION FOR PANEL OR TC IS READY TO RECEIVED PANEL OR TC. IF NECESSARY, THE CONTRACTOR SHALL PROVIDE TEMPORARY BRACING TO SUPPORT PANEL OR TC. CHECK WITH ENGINEER FOR APPROVAL OF SUPPORTS. THE CONTRACTOR SHALL RELOCATE ALL DEVICES SERVED BY THE PANEL OR TC TO ANOTHER PANEL OR TC.
12. MAINTAIN CIRCUITS FEEDING DEVICES OUTSIDE OF BOUNDARIES OF CURRENT DEMOLITION PHASE DURING DEMOLITION FOR EACH PHASE OF DEMOLITION.

TRENCHING AND EXCAVATION NOTES

1. IT SHALL BE THE CONTRACTORS RESPONSIBILITY TO CALL UNDERGROUND SERVICE ALERT "USA" BEFORE THE COMMENCEMENT OF ANY EXCAVATION. EACH CONTRACTOR SHALL HAVE THEIR OWN USA TICKET NUMBER FOR EACH PROJECT LOCATION AND SHALL NOT RIDE ON ANY OTHER CONTRACTORS TICKET. CONTRACTOR SHALL NOTIFY THE OWNER 72 HOURS PRIOR TO EXCAVATION.
2. THIS CONTRACTOR SHALL PERFORM ALL CUTTING AND PATCHING NECESSARY FOR THE INSTALLATION OF EQUIPMENT AND MATERIALS. ALL PATCHING SHALL ACCURATELY MATCH THE ADJOINING WORK.
3. THIS CONTRACTOR SHALL DO EXCAVATING REQUIRED FOR THE INSTALLATION OF THE WORK. UNDERGROUND LINES OUTSIDE THE BUILDINGS SHALL BE INSTALLED WITH A MINIMUM OF 24" OF COVER, EXCEPT DEPTH OF UTILITY SERVICES SHALL COMPLY WITH RESPECTIVE UTILITY COMPANY REQUIREMENTS.
4. BEFORE COMPACTION, MOISTEN OR AERATE EACH LAYER AS NECESSARY TO PROVIDE OPTIMUM MOISTURE CONTENT. COMPACT EACH LAYER TO REQUIRED PERCENTAGE OF MAXIMUM DRY DENSITY OR RELATIVE DRY DENSITY FOR EACH AREA CLASSIFICATION. DO NOT PLACE BACKFILL OR FILL MATERIAL ON SURFACES THAT ARE MUDDY, FROZEN, OR CONTAIN FROST OR ICE.
5. STRUCTURES, BUILDING SLABS, WALKWAYS, AND STEPS: COMPACT TOP 6" OF SUBGRADE AND EACH LAYER OF BACKFILL OR FILL MATERIAL AT 95% MAXIMUM RELATIVE COMPACTION.
6. COMPACT TOP 6" OF SUBGRADE MATERIAL AT 85% RELATIVE COMPACTION.
7. COMPACT TOP 6" OF SUBGRADE IMMEDIATELY BENEATH THE BASE COURSE AT 95% MINIMUM RELATIVE COMPACTION.
8. ANY SURPLUS EXCAVATION RESULTING FROM THESE EXCAVATIONS SHALL BE HAULED OFF.
9. AFTER ALL TRENCHES HAVE BEEN TAMPED IN, RAKE OUT ALL HIGH AND LOW AREAS ALONG THE TRENCH LINE. ALL CLODS AND SOLID ROCKS EXPOSED ON THE SURFACE AS A RESULT OF THE EXCAVATION SHALL BE BROKEN DOWN AND OR CLEANED UP. ALL TRENCH LINES SHALL BE RAKED LEVEL WITH EXISTING GRADE.
10. ELECTRICAL, NETWORK, OR DATA CONDUIT SHALL NOT BE RUN IN EXCAVATIONS PROVIDED FOR PLUMBING OR HEATING PIPES, UNLESS SEPARATED BY A MINIMUM OF 12 INCHES.
11. PATCH ALL TRENCHED AREAS TO MATCH EXISTING.
12. HAND EXCAVATE IN AREAS WHERE TRENCHING IS DIFFICULT DUE TO STRUCTURAL OBSTRUCTIONS OR EXISTING UNDERGROUND CONDUIT.
13. THE CONTRACTOR SHALL WALK THE SITE WITH THE DISTRICT TO IDENTIFY ALL EXISTING CONDUITS AND PIPES.
14. CONTRACTOR SHALL RETAIN AND PAY FOR THE SERVICES OF A SOILS LAB TO TEST FOR THE COMPACTION OF THE BACKFILL. A SOILS PROFILE SHALL BE DONE OF THE EXCAVATED NATIVE TRENCHED DIRT SO THE COMPACTION TEST CAN BE COMPARED WITH THE NATIVE DIRT PROFILE. THE CONTRACTOR SHALL PROVIDE ALL COMPACTION OF THE TRENCH REQUIRED TO MEET A 95% COMPACTION REQUIREMENT. AN INSPECTED AND SIGNED OFF COMPACTION TESTING REPORT SHALL BE PROVIDED BY THE SOILS TESTING LAB AND COPY OF THE COMPACTION TEST SHALL BE PROVIDED TO THE ENGINEER OF RECORD/PROJECT COORDINATOR PRIOR INSTALLING THE HARDSCAPE. THE CONTRACTOR SHALL WILL BE REQUIRED TO PAY FOR ALL TESTS UNTIL THE COMPACTION RESULTS MEET OR EXCEED THE COMPACTION TEST.
15. ALL EXISTING PAINTED TRAFFIC LINES, PARKING STALL LINES, ETC. SHALL BE REPAINTED AFTER THE PATCH UP AND REPAIR OF THE HARDSCAPE AREAS TO MATCH THE EXISTING PRIOR TO EXCAVATIONS.
16. ALL TRENCHED AREAS SHALL BE PROTECTED WITH HEAVY STEEL TRAFFIC PLATES TO ACCOMMODATE VEHICULAR TRAFFIC WHILE WORK IS UNDERWAY. ALL OPEN TRENCHES SHALL BE SAFEGUARDED AND BARRICADED.

LIGHTING FIXTURE SCHEDULE

TYPE	LIGHTS	MANUFACTURER AND MODEL	LAMPS	REMARKS	WATTS	LBS
E		GARDCO LIGHTING OR EQUAL #121-16L-400-NW-G4-3-UNV-IMRI2-PCB	LED	2,647 LUMEN, EXTERIOR, TYPE 3 DISTRIBUTION, EXTERIOR LED FIXTURE SURFACE MOUNTED ON A WALL. FIXTURE SHALL INCLUDE PHOTOCELL AND MOTION SENSOR THAT REDUCES LIGHTING BY 50% WHEN AREA IS UNOCCUPIED AND EMERGENCY DRIVER AT EMERGENCY FIXTURE LOCATIONS INDICATED ON LIGHTING PLAN.	22	15

SCHEDULES NOTES

1. COORDINATE ALL COLORS WITH OWNER/ARCHITECT PRIOR TO ORDERING. CONTRACTOR SHALL PROVIDE COLOR SAMPLES DURIN SUBMITTAL STAGE
2. ALL CLEAR, ACRYLIC, PRISMATIC LENSES ARE TO BE MINIMUM 0.125" PATTERN K12, U.O.N
3. ALL LEDS SHALL HAVE A CRI OF 0.8 AND COLOR TEMPERATURE OF 4000K.
4. ALL HALF SHADED FIXTURES SHALL HAVE AN EMERGENCY DRIVER WITH BATTERY BACKUP IN ORDER TO PROVIDE A MINIMUM OF 90 MINUTES OF BACKUP IN THE EVENT OF POWER OUTAGE WITH MINIMUM 1100 LUMEN OUTPUT. THE BATTERY CHARGER SHALL BE CONNECTED TO THE UNSWITCHED SOURCE.
6. ALL DRIVERS SHALL HAVE LESS THAN 10% THD.
7. FIXTURE TYPE IS SHOWN WITHIN MOST FIXTURES.
8. PRIOR TO ORDERING FIXTURES REFER TO THE LIGHTING PLAN FOR THE CORRECT VOLTAGES TO BE UTILIZED FOR THE FIXTURES.

MECHANICAL EQUIPMENT SCHEDULE

DESIG. # / #	DESCRIPTION	FLA/MCA/ HP/W	STARTER/ FUSES/ VFD	VOLT	PHASE	MAX. OCPD SIZE	CON-DUIT SIZE	CONDUCTOR #	CONDUCTOR SIZE	GND.
CU-1	CONDENSING UNIT	5.7FLA	FUSE/DISC.	208	3	NOTE 2	3/4"	4	12	NOTE 3
CU-2	↓	↓	↓	↓	↓	↓	↓	↓	↓	↓
FC-1	FAN COIL	34.2FLA	FUSE/DISC./ NEMA SIZE 2 STARTER	↓	↓	↓	1"	↓	6	↓
FC-2	↓	↓	FUSE/DISC./ NEMA SIZE 2 STARTER	↓	↓	↓	↓	↓	↓	↓

NOTES:
1. * = THERMAL RATED SWITCH FOR FRACTIONAL HORSEPOWER MOTORS.
2. REFER TO THE PANEL SCHEDULE AND SINGLE LINE DIAGRAM FOR THE CIRCUIT BREAKER AND CONDUIT SIZES, IF NOT INDICATED WITHIN THE SCHEDULE.
3. GROUNDING CONDUCTOR SIZE TO MATCH CIRCUIT CONDUCTOR SIZE.

GENERAL NOTES:
1. COORDINATE LOCATIONS AND POWER REQUIREMENT FOR MECHANICAL EQUIPMENT WITH MECHANICAL CONTRACTOR.
2. PROVIDE DISCONNECT PER NAME PLATE RATING OF MECHANICAL UNITS.

Borrelli & Associates, Inc.
Consulting Electrical Engineers
2032 N. Gateway Boulevard
Fresno, CA. 93727
Phone: 559-233-4138
http://www.borrelliengineering.com/
ca-bai@borrelliengineering.com
BAI# 20141

REGISTERED PROFESSIONAL ENGINEER JOHN BORRELLI No.E16390 Exp. 6/30/23 ELECTRICAL STATE OF CALIFORNIA

REGISTERED PROFESSIONAL ENGINEER RYAN W. CARLSON M34846 Exp. 6-30-22 MECHANICAL STATE OF CALIFORNIA

DATE: 05-14-21

MADERA UNIFIED SCHOOL DISTRICT
SERVER ROOM
1902 HOWARD ROAD
MADERA, CA. 93637

CDS #: 20-65243

REVISIONS

LAWRENCE ENGINEERING GROUP
7084 N. Maple Ave., Suite 101
Fresno, CA 93720
(559) 431-0101
FAX (559) 431-1032

TITLE: ELECTRICAL NOTES, REQUIREMENTS, LIGHTING & MECHANICAL SCHEDULES

SHEET: E1.02

PROJECT 21052

(N) PANEL 'G'

VOLTAGE: 208/120V, 3Ø, 4W | BUS: 125A | MAIN BREAKER: 70A/3P | BREAKER AIC: 35,000 | MOUNTING: SURFACE | NEMA 3R ENCLOSURE

CIR #	BKR	LOAD (VA) PHASE A	PHASE B	PHASE C	DESCRIPTION	DESCRIPTION	LOAD (VA) PHASE C	PHASE B	PHASE A	BKR	CIR #
1	20A/1P	240			GEN. BATT. CHARGER	FUEL MAINT. SYSTEM			600	20A/1P	2
3	20A/1P		1250		JACKET WATER HEATER	SPARE		0		20A/1P	4
5	20A/1P			1250		FUEL TANK ALARM PNL	100			20A/1P	6
7	20A/1P	44			WALL MOUNTED LIGHTS	SPARE			0	20A/1P	8
9	20A/1P		400		SPARE	SPARE		400		20A/1P	10
11	20A/1P			180	GEN. GFCI RECEPTACLE	PANEL REC.	180			20A/1P	12
13	20A/1P	400			SPARE	SPARE			400	20A/1P	14
15	20A/1P		400		↓	↓		400		20A/1P	16
17	20A/1P			400	↓	↓	400			20A/1P	18
19		0			SPACE	SPACE			0		20
21	↓		0		↓	↓		0		↓	22
23	↓			0	↓	↓	0			↓	24
25	↓	0			↓	↓			0	↓	26
27	↓		0		↓	↓		0		↓	28
29	↓			0	↓	↓	0			↓	30
31	↓	0			↓	↓			0	↓	32
33	↓		0		↓	↓		0		↓	34
35	↓			0	↓	↓	0			↓	36
37	↓	0			↓	↓			0	↓	38
39	↓		0		↓	↓		0		↓	40
41	↓			0	↓	↓	0			↓	42

TOTAL Ø LOADS (VA): PHASE A = 1684 | PHASE B = 2850 | PHASE C = 2510
TOTAL Ø LOADS (A): PHASE A = 14 | PHASE B = 24 | PHASE C = 21
TOTAL LOAD: 7044 VA 20 A
NOTE:

(N) PANEL 'M'

VOLTAGE: 208/120V, 3Ø, 4W | BUS: 150A | MAIN BREAKER: 150A/3P | BREAKER AIC: 35,000 | MOUNTING: SURFACE | NEMA 3R ENCLOSURE

CIR #	BKR	LOAD (VA) PHASE A	PHASE B	PHASE C	DESCRIPTION	DESCRIPTION	LOAD (VA) PHASE C	PHASE B	PHASE A	BKR	CIR #
1		4107							4107		2
3	60A/3P		4107		FC-1	FC-2		4107		60A/3P	4
5				4107			4107				6
7		685							685		8
9	15A/3P		685		CU-1	CU-2		685		15A/3P	10
11				685			685				12
13	20A/1P	400			SPARE	NETWORK ROOM LTG			400	20A/1P	14
15	20A/1P		400		↓	HVAC ROOF REC.		180		20A/1P	16
17	15A/1P			168	HEATER PAD FOR CU-1	HEATER PAD FOR CU-2	168			15A/1P	18
19		0			SPACE	SPACE			0		20
21	↓		0		↓	↓		0		↓	22
23	↓			0	↓	↓	0			↓	24
25	↓	0			↓	↓			0	↓	26
27	↓		0		↓	↓		0		↓	28
29	↓			0	↓	↓	0			↓	30
31	↓	0			↓	↓			0	↓	32
33	↓		0		↓	↓		0		↓	34
35	↓			0	↓	↓	0			↓	36
37	↓	0			↓	↓			0	↓	38
39	↓		0		↓	↓		0		↓	40
41	↓			0	↓	↓	0			↓	42

TOTAL Ø LOADS (VA): PHASE A = 10384 | PHASE B = 10164 | PHASE C = 9920
TOTAL Ø LOADS (A): PHASE A = 86 | PHASE B = 85 | PHASE C = 83
TOTAL LOAD: 30468 VA 85 A
NOTE:

(N) PANEL 'AC-PNL-1'

VOLTAGE: 208/120V, 3Ø, 4W | BUS: 225A | MAIN BREAKER: 200A/3P | BREAKER AIC: 35,000 | MOUNTING: SURFACE | NEMA 1 ENCLOSURE

CIR #	BKR	LOAD (VA) PHASE A	PHASE B	PHASE C	DESCRIPTION	DESCRIPTION	LOAD (VA) PHASE C	PHASE B	PHASE A	BKR	CIR #
1		1201							1560		2
3	20A/3P		1201		EXISTING LOAD	EXISTING LOAD		1560		30A/2P	4
5				1201			1560				6
7	20A/1P	960			EXISTING LOAD	EXISTING LOAD			1560		8
9			1201					2080		30A/2P	10
11	20A/3P			1201	EXISTING LOAD		2080				12
13		1201				SPARE			0	20A/1P	14
15	20A/1P		0		SPARE	SPARE		0		20A/1P	16
17	20A/1P			0	↓	↓	0			20A/1P	18
19	20A/1P	300			FIRE SUPRESSION PNL	FACP			200	20A/1P	20
21	20A/1P		0		SPARE	SPARE		0		20A/1P	22
23	20A/1P			0	↓	↓	0			20A/1P	24
25		0			SPACE	SPACE			0		26
27	↓		0		↓	↓		0		↓	28
29	↓			0	↓	↓	0			↓	30
31	↓	0			↓	↓			0	↓	32
33	↓		0		↓	↓		0		↓	34
35	↓			0	↓	↓	0			↓	36
37		3960							0		38
39	200A/3P		4800		PANEL 'AC-PNL-1B'	↓		0		↓	40
41				4920		↓	0			↓	42

TOTAL Ø LOADS (VA): PHASE A = 10942 | PHASE B = 10842 | PHASE C = 10962
TOTAL Ø LOADS (A): PHASE A = 91 | PHASE B = 90 | PHASE C = 91
TOTAL LOAD: 32746 VA 91 A
NOTE:
1. PANEL SHALL HAVE SURGE PROTECTIVE DEVICE.

(E) PANEL 'AC-PNL-1'

VOLTAGE: 120/208V, 3Ø, 4W | MAIN BREAKER: 100A/3P | MOUNTING: SURFACE

CIR #	BKR	LOAD (VA) PHASE A	PHASE B	PHASE C	DESCRIPTION	DESCRIPTION	LOAD (VA) PHASE C	PHASE B	PHASE A	BKR	CIR #
42					SPACE	SPACE					41
40	↓				↓	↓				↓	39
38	↓				↓	↓				↓	37
36		1201				EXISTING LOAD			1560		35
34	20A/3P		1201		EXISTING LOAD			1560		30A/2P	33
32				1201		EXISTING LOAD	1560				31
30	20A/1P	960			EXISTING LOAD				1560		29
28			1201			EXISTING LOAD		2080		30A/2P	27
26	20A/3P			1201	EXISTING LOAD		2080				25
24		1201				EXISTING LOAD			720	20A/1P	23
22	30A/1P		960		EXISTING LOAD	EXISTING LOAD		960		20A/1P	21
20	20A/1P			960	EXISTING LOAD	EXISTING LOAD	1560			30A/2P	19
18	20A/1P	960			EXISTING LOAD				1560		17
16	20A/1P		960		EXISTING LOAD	EXISTING LOAD		1920		30A/1P	15
14						EXISTING LOAD	720			20A/1P	13
12						EXISTING LOAD			720	20A/1P	11
10	100A/3P	INPUT MAIN				EXISTING LOAD		960		20A/1P	9
8						EXISTING LOAD	720			20A/1P	7
6		0			SPACE	SPACE			0		5
4	↓		0		↓	↓		0			3
2	↓			0	↓	↓	0				2

TOTAL Ø LOADS (VA): PHASE A = 10442 | PHASE B = 11802 | PHASE C = 10002
TOTAL Ø LOADS (A): PHASE A = 87 | PHASE B = 98 | PHASE C = 83
TOTAL LOAD: 32246 VA 90 A

(N) PANEL 'AC-PNL-1B'

VOLTAGE: 208/120V, 3Ø, 4W | BUS: 225A | MAIN BREAKER: 200A/3P | BREAKER AIC: 35,000 | MOUNTING: SURFACE | NEMA 1 ENCLOSURE

CIR #	BKR	LOAD (VA) PHASE A	PHASE B	PHASE C	DESCRIPTION	DESCRIPTION	LOAD (VA) PHASE C	PHASE B	PHASE A	BKR	CIR #
1	20A/1P	0			SPARE	EXISTING LOAD			720	20A/1P	2
3	30A/1P		960		EXISTING LOAD	EXISTING LOAD		960		20A/1P	4
5	20A/1P			960	EXISTING LOAD	EXISTING LOAD	1560			30A/2P	6
7	20A/1P	960			EXISTING LOAD				1560		8
9	20A/1P		0		SPARE	EXISTING LOAD		1920		30A/1P	10
11	20A/1P			960	EXISTING LOAD	EXISTING LOAD	720			20A/1P	12
13	20A/1P	0			SPARE	EXISTING LOAD			720	20A/1P	14
15	20A/1P		0		↓	EXISTING LOAD		960		20A/1P	16
17	20A/1P			0	↓	EXISTING LOAD	720			20A/1P	18
19	20A/1P	0			↓	SPARE			0	20A/1P	20
21	20A/1P		0		↓	↓		0		20A/1P	22
23	20A/1P			0	↓	↓	0			20A/1P	24
25		0			SPACE	SPACE			0		26
27	↓		0		↓	↓		0		↓	28
29	↓			0	↓	↓	0			↓	30
31	↓	0			↓	↓			0	↓	32
33	↓		0		↓	↓		0		↓	34
35	↓			0	↓	↓	0			↓	36
37	↓	0			↓	↓			0	↓	38
39	↓		0		↓	↓		0		↓	40
41	↓			0	↓	↓	0			↓	42

TOTAL Ø LOADS (VA): PHASE A = 3960 | PHASE B = 4800 | PHASE C = 4920
TOTAL Ø LOADS (A): PHASE A = 33 | PHASE B = 40 | PHASE C = 41
TOTAL LOAD: 13680 VA 38 A
NOTE:
1. PANEL SHALL HAVE SURGE PROTECTIVE DEVICE.

GENERATOR, ATS, AND UPS WEIGHT & DIMENSIONS SCHEDULE

NAME	RATED	WEIGHT(LB)	W	D	H	MOUNTING
GENERATOR	125kW	6188	134"	60"	82"	FREESTANDING
ATS- 'AT1'	400A	1620	49.12"	36.66"	95.2"	FREESTANDING
ATS- 'AT2'	400A	1620	49.12"	36.66"	95.2"	FREESTANDING
60KW UPS	-	2552	59.86"	33.34"	58.46"	FREESTANDING
FUTURE 60KW UPS	-	2552	59.86"	33.34"	58.46"	FREESTANDING

ELECTRICAL DISTRIBUTION WEIGHT & DIMENSIONS SCHEDULE

NAME	CB	WEIGHT(lb)	W	D	H	MOUNTING
DBEM1	450A	1200	36"	39.03"	91.50"	FREESTANDING
DBEM2	250A	1200	36"	39.03"	91.50"	FREESTANDING
PANEL 'G'	70A	164	20"	6.5"	50"	SURFACE
PANEL 'M'	150A	296	20"	6.5"	50"	SURFACE
PANEL 'AC-PNL-1'	200A	204	20"	5.75"	68"	SURFACE
PANEL 'AC-PNL-1B'	200A	150	20"	5.75"	50"	SURFACE

TRANSFORMER WEIGHT & DIMENSIONS SCHEDULE

NAME	WEIGHT(LBS)	H	W	D
75kVA XFMR 'TX2'	727	33.5"	30.06"	27.43"

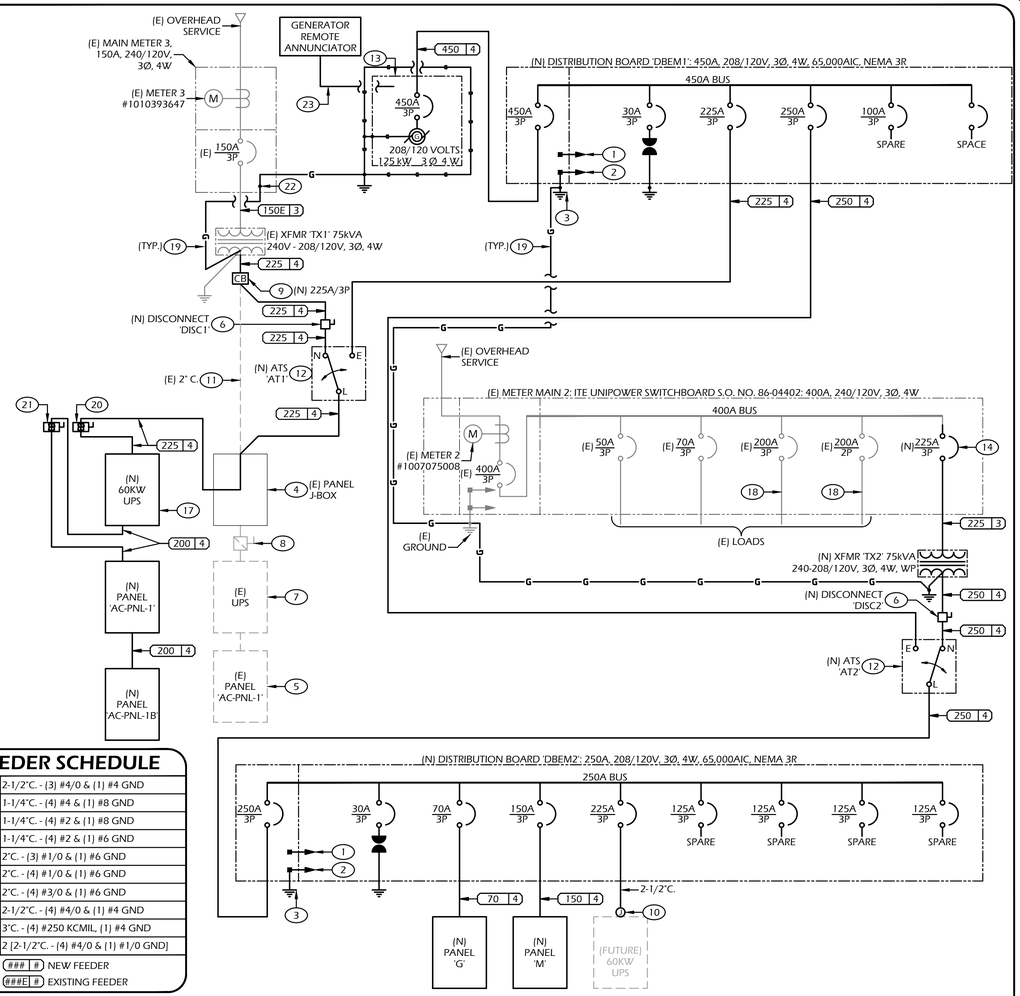

FEEDER SCHEDULE

225 3	2-1/2"C. - (3) #4/0 & (1) #4 GND
70 4	1-1/4"C. - (4) #4 & (1) #8 GND
90 4	1-1/4"C. - (4) #2 & (1) #8 GND
100 4	1-1/4"C. - (4) #2 & (1) #6 GND
150E 3	2"C. - (3) #1/0 & (1) #6 GND
150 4	2"C. - (4) #1/0 & (1) #6 GND
200 4	2"C. - (4) #3/0 & (1) #6 GND
225 4	2-1/2"C. - (4) #4/0 & (1) #4 GND
250 4	3"C. - (4) #250 KCMIL, (1) #4 GND
450 4	2 [2-1/2"C. - (4) #4/0 & (1) #1/0 GND]

NOTE: ### # NEW FEEDER
###E # EXISTING FEEDER

1 - SINGLE LINE DIAGRAM

NOT TO SCALE

SHEET NOTES (#)

1. BOARD SHALL HAVE FULL LENGTH NEUTRAL BUS.
2. BOARD SHALL HAVE FULL LENGTH GROUND BUS.
3. PROVIDE GROUNDING PER SPECIFICATIONS.
4. EXISTING PANEL J-BOX LOCATED BEHIND EXISTING PANEL 'AC-PNL-1'. DISCONNECT AND REMOVE ALL INTERIOR ELECTRICAL COMPONENTS OF THE EXISTING PANEL J-BOX AND UTILIZE IT AS A WIRE-WAY.
5. DISCONNECT AND REMOVE EXISTING PANEL 'AC-PNL-1' AND REPLACE WITH THE NEW 'AC-PNL-1'.
6. PROVIDE AND INSTALL EATON 208V, 3Ø, 400A, NEMA 3R HEAVY DUTY ENHANCED VISIBLE BLADE SWITCH DISCONNECT PER PG&E REQUIREMENTS.
7. DISCONNECT/REMOVE THE EXISTING UPS AND ASSOCIATED BATTERY CABINETS AND RETURN TO OWNER. PULL ALL EXISTING CONDUIT AND CONDUCTORS BACK TO SOURCE.
8. DISCONNECT AND REMOVE THE EXISTING UPS SWITCH DISCONNECT AND ASSOCIATED ELECTRICAL DEVICES. PULL ALL EXISTING CONDUIT AND CONDUCTORS BACK TO SOURCE.
9. DISCONNECT AND REMOVE THE EXISTING CIRCUIT BREAKER AND REPLACE WITH NEW AS INDICATED. CONNECT FEEDERS AS INDICATED. PROVIDE NEW CIRCUIT BREAKER IN NEMA 1 ENCLOSURE. PROVIDE AND INSTALL NEW INDICATED CIRCUIT BREAKER AT THE SECONDARY SIDE OF THE EXISTING TRANSFORMER.
10. TERMINATE CONDUIT INTO NEW J-BOX AT LOCATION INDICATED FOR FUTURE 60KW UPS. REFER TO SHEET E3.01.
11. DISCONNECT AND REMOVE THE EXISTING CONDUIT AND FEEDERS. PROVIDE AND INSTALL NEW CONDUIT AND CONDUCTOR INDICATED FROM THE SECONDARY SIDE OF THE EXISTING TRANSFORMER TO THE EXISTING PANEL 'AC-PNL-1' VIA THE NEW ATS 'AT1' AND THE NEW 60KW UPS.
12. PROVIDE AND INSTALL ASCO 7000 SERIES #J-07ATB-B-3-0400-C-5X-M 208V, 3Ø, SWITCHED NEUTRAL, 400A, OPEN TRANSITION, NEMA 3R BYPASS ISOLATION AUTOMATIC TRANSFER SWITCH.
13. PROVIDE AND INSTALL 208/120V, 3Ø, 4W, 125KW BLUESTAR #VOLVO VD12.5-02FT4 TIER 4 FINAL EMERGENCY GENERATOR WITH WEATHERPROOF LEVEL 2 SOUND ATTENUATED ENCLOSURE; GENERATOR MOUNTED 80% RATED INDICATED CIRCUIT BREAKER; DCP7310 CONTROL PANEL, REMOTE AND LOCAL EMERGENCY SHUT-OFF. LOCAL EMERGENCY SHUTOFF PUSHBUTTON MOUNTED ON THE OUTSIDE OF THE ENCLOSURE. STANDBY GENERATOR SHALL BE UL LISTED CERTIFIED. GENERATOR SHALL HAVE JACKET WATER HEATER, BATTERY, AND BATTERY CHARGER. ALSO, IT SHALL HAVE ALXIILIARY CONFIGURABLE INPUT/OUTPUT RELAY. GENERATOR SHALL HAVE SCR WITH INTEGRAL DEF TANK AND DEF METERING CONTROLS. CONNECT AND BOND NEUTRAL. OTHER MANUFACTURERS SHALL BE CONSIDERED EQUAL AS LONG AS THEY MEET THE SPECIFIED GENERATOR REQUIREMENTS.
14. PROVIDE AND INSTALL NEW INDICATED CIRCUIT BREAKER. PROVIDE ALL MOUNTING HARDWARE FOR A FULLY FUNCTIONING SYSTEM. ADJUST THE DEAD-FRONT COVER STAND OFF EXTENSION LEGS AS REQUIRED. CUSTOM MAKE A NEW 12 GAUGE 24-INCH BY 24-INCH PANEL COVER AND PAINT ANSI GRAY 61. CUSTOM CUT HOLES WITHIN COVER TO ACCOMMODATE THE EXISTING CIRCUIT BREAKERS PROVIDE MOUNTING HOLES WITHIN COVER AND SECURELY FASTEN TO EXISTING BOARD.
15. EXTEND AND REROUTE THESE CIRCUITS TO THE NEW PANEL 'AC-PNL-1'. REFER TO THE NEW PANEL 'AC-PNL-1' SCHEDULE.
16. EXTEND AND REROUTE THESE CIRCUITS TO THE NEW PANEL 'AC-PNL-1B'. REFER TO THE NEW PANEL 'AC-PNL-1B' SCHEDULE.
17. PROVIDE AND INSTALL A 208V INPUT & 208/120V, 3Ø, 4W OUTPUT, 60KW SCHNEIDER ELECTRIC UPS #GALAXY VS WITH 5 MINUTES OF RUNTIME WITH BYPASS AND SEISMIC KIT FOR THE CABINETS.
18. THE EXISTING LOAD IS CONNECTED IN SINGLE PHASE 240/120V. THE THIRD POLE ON THE EXISTING BREAKER IS NOT USED.
19. PROVIDE AND INSTALL A #2 COPPER GROUND CONDUCTOR IN A 1-INCH CONDUIT TO GROUND CONNECT ALL GROUNDS FOR COMMON POINT GROUNDING.
20. UPS LINE SIDE DISCONNECT EATON 4-POLE DISCONNECT WITH SHUNT 24V DC TRIP CAPABILITY MODEL #STS-4-2-4-U-D-6-5-N-W.
21. UPS LOAD SIDE DISCONNECT EATON 4-POLE DISCONNECT WITH SHUNT 24V DC TRIP CAPABILITY MODEL #STS-4-2-4-U-D-6-5-N-W.
22. MAKE GROUND CONNECTION TO PANEL GROUND.
23. GENERATOR REMOTE ANNUNCIATOR CABLE 3/4-INCH CONDUIT PER MANUFACTURERS SPECIFICATIONS.

Borrelli & Associates, Inc.
Consulting Electrical Engineers
2032 N. Gateway Boulevard
Fresno, CA. 93727
Phone: 559-233-4138
http://www.borrelliengineering.com/
ca-bai@borrelliengineering.com
BAI# 20141

REGISTERED PROFESSIONAL ENGINEER JOHN BORRELLI No.E16390 Exp. 6/30/21 ELECTRICAL STATE OF CALIFORNIA

APPROVALS:
APPLICATION #

REGISTERED PROFESSIONAL ENGINEER RYAN W. CARLSON M34846 Exp. 6-30-22 MECHANICAL STATE OF CALIFORNIA

DATE: 05-14-21

MADERA UNIFIED SCHOOL DISTRICT
SERVER ROOM
1902 HOWARD ROAD
MADERA, CA. 93637

CDS #: 20-65243

REVISIONS

LAWRENCE ENGINEERING GROUP
7084 N. Maple Ave., Suite 101
Fresno, CA 93720
(559) 431-0101
FAX (559) 431-1562

TITLE:
PARTIAL SINGLE LINE DIAGRAM, EQUIPMENT ATTRIBUTES, & PANEL SCHEDULES

SHEET: E1.03

PROJECT 21052

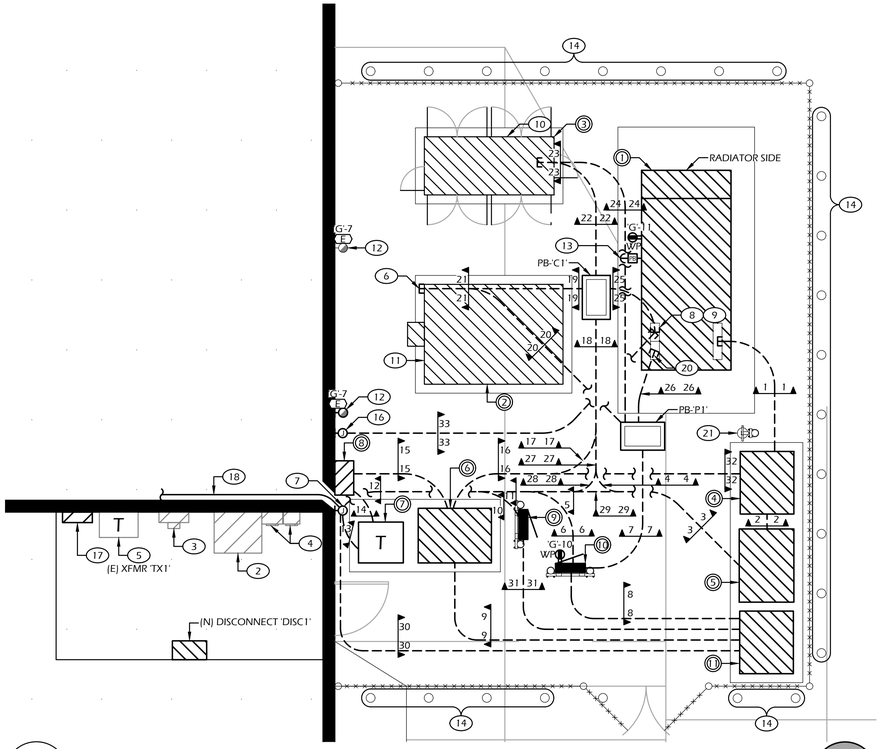

2 PARTIAL ELECTRICAL SITE PLAN
SCALE: 1/4" = 1' - 0"

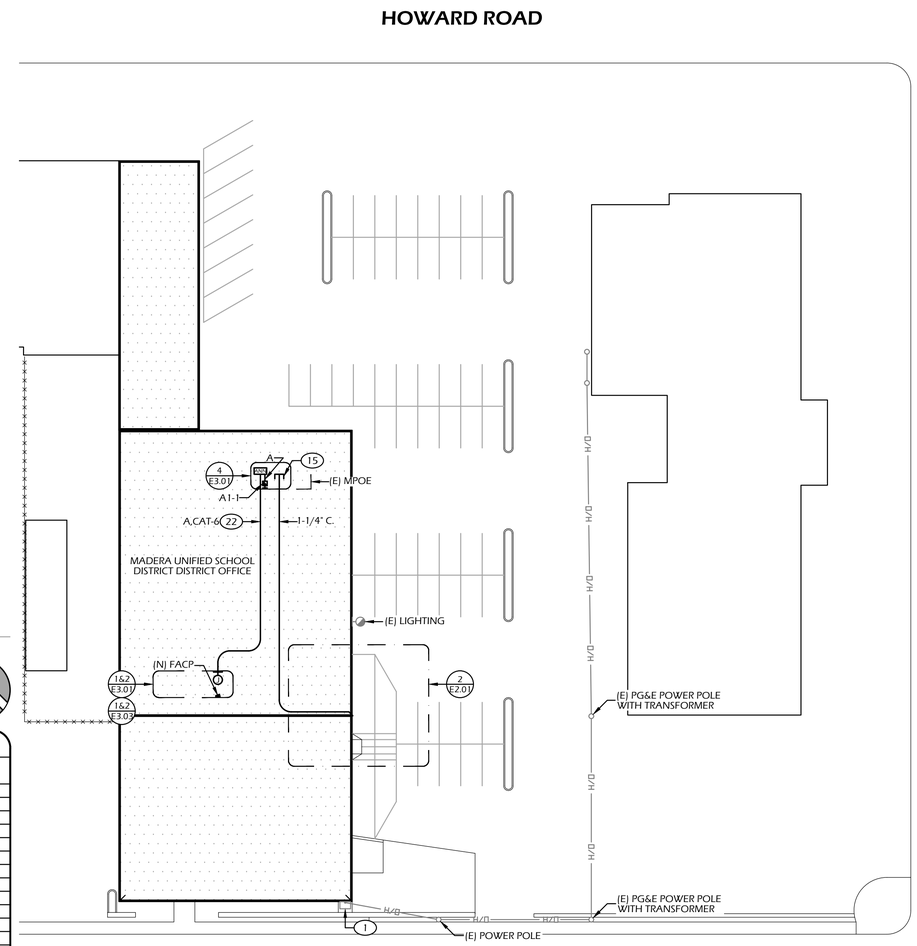

1 ELECTRICAL AND FIRE ALARM SITE PLAN
SCALE: 1" = 30' - 0"

NEW FIRE ALARM AND GENERATOR REMOTE ANNUNCIATOR LOCATION AT OFFICE ENTRANCE
3 SCALE: NOT TO SCALE

DUCT BANK SCHEDULE

DESIGNATOR	POWER		COMMUNI-CATIONS
	POWER	SPARE	
1	(2)2-1/2"	-	-
2	2-1/2"	-	-
3	2-1/2"	-	1-1/4"
4	-	-	1-1/4"
5	2-1/2"	-	1"
6	3/4"	-	-
7	(7) 1"	1"	-
8	1-1/4"	-	-
9	3"	-	-
10	(7) 3/4", (2)1"	-	-
11	2-1/2" & 3/4"	-	1"
12	2-1/2", (8)3/4", (2)1"	-	1"
13	2-1/2"	-	-
14	3"	-	-
15	3"	-	-
16	2-1/2"	-	1-1/4"
17	-	-	1-1/4"
18	-	-	(2) 1-1/4"
19	-	-	(2) 1-1/4"
20	1"	-	-
21	1-1/4"	-	(2) 1-1/4"
22	-	-	(2) 1-1/4"
23	1-1/4"	-	(2) 1-1/4"
24	1"	-	-
25	-	-	(4) 1-1/4" & 1"
26	(5) 1"	1"	-
27	-	-	1" & 1-1/4"
28	-	-	1"
29	2-1/2"	-	-
30	2-1/2"	-	-
31	2"	-	-
32	2-1/2"	-	-
33	-	-	1-1/4"

PULL BOX SCHEDULE

CATEGORY	DESIGNATION	MINIMUM SIZE	LID TYPE	SYSTEMS
POWER	P1	B1324	H/20	POWER
	-	-	-	-
COMM-UNICATION	C1	B1324	H/20	DATA
	-	-	-	-

NOTES:-
1. ALL PULL BOXES SHALL BE EITHER BROOKS, CHRISTY, OR EQUIVALENT.
2. ALL PULL BOXES SHALL BE PROVIDED WITH EXTENSION RINGS AND BOLT DOWN COVERS AS REQUIRED TO SUIT THE APPLICATION. VERIFY PULL BOX LOCATIONS REQUIRING FULL TRAFFIC COVERS WITH THE ARCHITECT AND CIVIL ENGINEER.
3. LABEL PULL BOXES `ELECTRICAL', `SIGNAL' OR `COMMUNICATIONS' AS REQUIRED.

NEW EQUIPMENT SCHEDULE

1. 125kW GENERATOR
2. FUEL TANK
3. FUEL MAINTENANCE SYSTEM
4. DISTRIBUTION BOARD 'DBEM1'
5. ATS 'AT1'
6. ATS 'AT2'
7. TRANSFORMER 'TX2'
8. DISCONNECT 'DISC2'
9. PANEL 'M'
10. PANEL 'G'
11. DISTRIBUTION BOARD 'DBEM2'

GENERAL NOTES

1. MADERA DISTRICT NOW OWNS THE FACILITY.
2. COORDINATE UNDERGROUND CONDUIT STUB OUT LOCATIONS WITH EQUIPMENT MANUFACTURERS.
3. PROVIDE CONCRETE PAD FOR ALL GROUND MOUNTED EQUIPMENT.

SHEET NOTES

1. EXISTING METER MAIN - 1
2. EXISTING METER MAIN - 2
3. EXISTING METER MAIN - 3
4. EXISTING MISCELLANEOUS METER SUB-PANELS WITH PG&E METER REMOVED AND ELECTRICAL NO LONGER USED.
5. EXISTING FLOOR-MOUNTED TRANSFORMER 'TX1'.
6. CONNECT FUEL TANK LEVEL CONTROLLER TO CIRCUIT INDICATED USING THREE #10 AWG CONDUCTORS. PROVIDE AND INSTALL #16 STP AND SIX #14 AWG FROM FUEL TANK CONTROL PANEL TO GENERATOR FOR FUEL TANK LEVEL SIGNALS AND LEAK DETECTION SIGNAL.
7. PROVIDE AND INSTALL CONDUITS FOR POWER. RUN CONDUITS UP THE WALL THEN CORE DRILL THROUGH CONCRETE/CMU WALL AS HIGH AS POSSIBLE TO RUN CONDUIT TO THE EXISTING METER MAIN 2, TO THE EXISTING TRANSFORMER 'TX1' VIA THE DISCONNECT 'DISC1', TO THE NEW AND FUTURE 60KW UPS, TO THE NEW MECHANICAL UNITS, TO THE REMOTE PUSH BUTTON EMERGENCY SHUT-OFF, AND TO THE NEW WALL MOUNTED LIGHTS. PROVIDE AND INSTALL (2) 18-INCH WIDE x 36-INCH TALL x 12-INCH DEEP, HINGED J-BOX. REFER TO THE ONE LINE DIAGRAM AND MECHANICAL SCHEDULE ON SHEET E1.03 FOR THE CONDUIT AND CONDUCTORS SIZE.
8. PROVIDE AND INSTALL (2) #12 AWG CONDUCTORS BACK TO THE FUEL MAINTENANCE SYSTEM FOR FUEL MAINTENANCE SHUT-OFF WHEN THE GENERATOR IS RUNNING. CONNECT AND PROGRAM AN ANALOG RELAY FROM THE GENERATOR CONTROLLER TO OPEN UPON GENERATOR RUN TO OPEN THE RUN CIRCUIT ON THE FUEL MAINTENANCE PUMP TO STOP THE FUEL MAINTENANCE PUMP OPERATION.
9. PROVIDE AND INSTALL THREE #14 AWG FOR THE GENERATOR START CIRCUIT BACK TO THE ATS 'AT1' AND 'AT2'.
10. PROVIDE AND INSTALL PREFERRED UTILITIES MANUFACTURING #PF-501-CA-1-WR-1 OR APPROVED EQUAL DIESEL FUEL MAINTENANCE SYSTEM IN A WEATHERPROOF, RAIN-TIGHT CUSTOM ENCLOSURE PER DETAIL 6/E4.01. CONNECT TO CIRCUIT INDICATED USING THREE #10 AWG CONDUCTORS. PROVIDE SIGNAL CONDUCTORS BETWEEN FUEL MAINTENANCE SYSTEM CONTROLLER AND FUEL TANK LEVEL CONTROLLER. COORDINATE WITH MANUFACTURER(S).
11. PROVIDE AND INSTALL 1000 GALLON, UL 2085 DIESEL FUEL TANK, LEVEL CONTROLLER/LEAK DETECTOR, VALVES, LEVEL SENSOR, LEVEL SWITCHES, GAUGES, LEAK SENSOR, FILLING CONNECTION/SPILL BOX, AND ALL OTHER ACCESSORIES FOR A FULLY FUNCTION DIESEL FUEL TANK MEETING ALL APPLICABLE REQUIREMENTS OF CALIFORNIA FIRE CODE AND NFPA 30. THE CONTRACTOR SHALL COORDINATE WITH THE GENERATOR SUPPLIER FOR THE FUEL LINE INTERCONNECTION TO THE GENERATOR. THE FUEL TANK SHALL COME WITH ALL REQUIRED VENT LINES, VALVES, LEAK DETECTION, AND CONTROL PANEL PER A UL APPROVED ASSEMBLED.
12. PROVIDE AND INSTALL NEW WALL MOUNTED LIGHT FIXTURE ON EXTERIOR OF BUILDING AT SAME HEIGHT AS EXISTING NORTHERN EXTERIOR FIXTURE.
13. PROVIDE AND INSTALL LOCAL MUSHROOM HEAD PUSH BUTTON FOR EMERGENCY POWER SHUT-OFF. PROVIDE AND INSTALL SIGNAL WIRING WITHIN A 1-INCH CONDUIT BACK TO THE GENERATOR PER THE GENERATOR MANUFACTURER.
14. PROVIDE AND INSTALL FIXED BARRIER POST CONSISTING OF A 72-INCH BY 4-INCH DIAMETER, CONCRETE FILLED, SCHEDULE 80, STEEL PIPE AND CAP PAINTED WITH CORROSION RESISTANT PAINT EMBEDDED 36-INCH INTO A 42-INCH BY 15-INCH DIAMETER CONCRETE BASE PER CALIFORNIA FIRE CODE SECTION 312. PROVIDE AND INSTALL TWO 3-INCH REFLECTIVE TAPE BANDS ON EACH POST.
15. PROVIDE AND INSTALL GENERATOR REMOTE ANNUNCIATOR AT THE DISTRICT OFFICE ENTRANCE. FISH THE FLEXIBLE CONDUIT AND CABLING WITHIN THE INTERIOR WALL TO CONCEAL. PROVIDE A 2-GANG CUT-IN BACK BOX TO LAND THE CONDUIT AND CABLING. CUT THE EXISTING GYPSUM BOARD TO INSTALL THE RECESS MOUNTED BACK BOX TO MOUNT THE GENERATOR REMOTE ANNUNCIATOR. RUN CONDUIT AND CABLING BACK TO THE GENERATOR CONTROLLER.
16. PROVIDE AND INSTALL 12-INCH BY 12-INCH BY 8-INCH NEMA-3R HINGED WIRE WAY MOUNTED UP HIGH TO ROUTE THE GENERATOR REMOTE ANNUNCIATOR CABLE. CORE DRILL THROUGH THE EXISTING CONCRETE/CMU WALL AND NIPPLE THROUGH WITH CONDUIT.
17. DISCONNECT AND REMOVE THE EXISTING WALL MOUNTED CIRCUIT BREAKER FOR THE SECONDARY OF THE EXISTING TRANSFORMER AND REPLACE WITH THE NEW WALL MOUNTED BREAKER IN A NEMA-1 ENCLOSURE . REFER TO THE SINGLE LINE DIAGRAM.
18. PROVIDE AND INSTALL CONDUIT WITHIN THE EXISTING ACCESSIBLE T-BAR ATTIC SPACE. FASTEN CONDUIT TO CMU WALL OR WOOD ROOF JOISTS. COORDINATE/SCHEDULE WITH THE DISTRICT FOR WORK IN THIS AREA.
19. NOT USED.
20. CONDUIT AND CONDUCTORS FROM THE GENERATOR TO PANEL 'G' FOR THE FOLLOWING SYSTEMS. REFER TO PANEL 'G' SCHEDULE:
    1-INCH CONDUIT - (3) # 12 AWG FOR THE BATTERY CHARGER,
    1-INCH CONDUIT - (3) # 12 AWG FOR THE RECEPTACLE,
    1-INCH CONDUIT - (3) # 12 AWG FOR THE ALTERNATOR HEATER
    1-INCH CONDUIT - (3) # 12 AWG FOR OIL HEATER,
    1-INCH CONDUIT - (3) # 12 AWG FOR THE COOLANT HEATER,
    1-INCH CONDUIT - SPARE CONDUIT FROM PANEL 'G' TO THE GENERATOR.
21. PROVIDE AND INSTALL 2A-'40B:C FIRE EXTINGUISHER ON A 4-INCH STEEL BOLLARD POLE WITH 18-INCH BY 12-INCH DIAMETER FOUNDATION.
22. PROVIDE AND INSTALL CAT-6 CABLE FROM THE (N) FACP TO THE REMOTE ANNUNCIATOR AND CABLE TYPE A FOR MANUAL PULL STATION IN THE DISTRICT OFFICE ENTRANCE WITHIN A 1-1/4-INCH CONDUIT. REFER TO SHEET E3.3.

Borrelli & Associates, Inc.
Consulting Electrical Engineers
2032 N. Gateway Boulevard
Fresno, CA. 93727
Phone: 559-233-4138
http://www.borrelliengineering.com/
ca-bai@borrelliengineering.com
BAI# 20141

REGISTERED PROFESSIONAL ENGINEER JOHN BORRELLI No.E16390 Exp. 6/30/21 ELECTRICAL STATE OF CALIFORNIA

APPROVALS:
APPLICATION #

REGISTERED PROFESSIONAL ENGINEER RYAN W. CARLSON M34846 Exp. 6-30-22 MECHANICAL STATE OF CALIFORNIA

DATE: 05-14-21

MADERA UNIFIED SCHOOL DISTRICT
SERVER ROOM
1902 HOWARD ROAD
MADERA, CA. 93637
CDS #: 20-65243

REVISIONS

LAWRENCE ENGINEERING GROUP
7084 N. Maple Ave., Suite 101
(559) 431-0101
Fresno, CA 93720
FAX (559) 431-1062

TITLE: ELECTRICAL AND FIRE ALARM SITE PLAN

SHEET: E2.01

PROJECT 21052

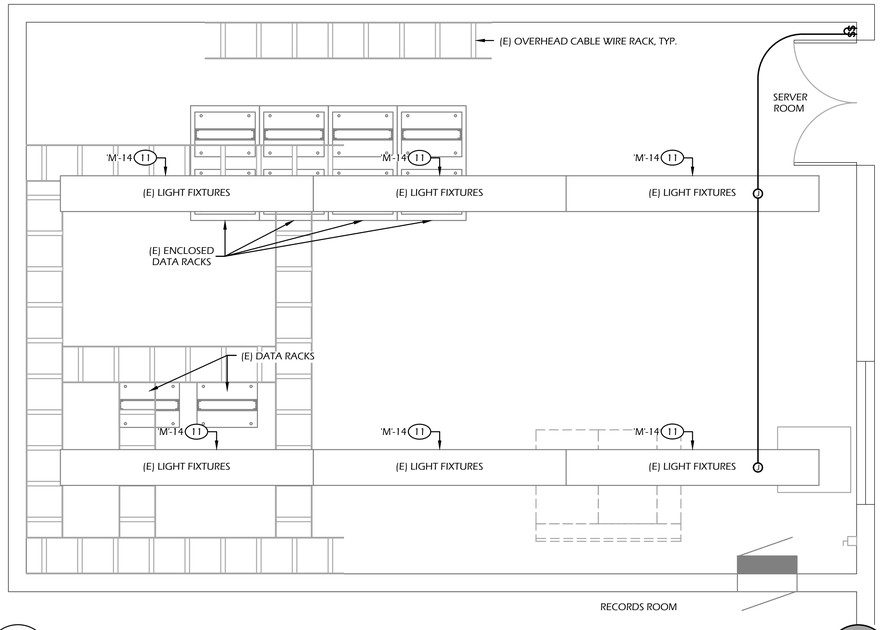

3 - **SERVER ROOM - EXISTING LIGHTING FLOOR PLAN**
SCALE: 1/2" = 1' - 0"

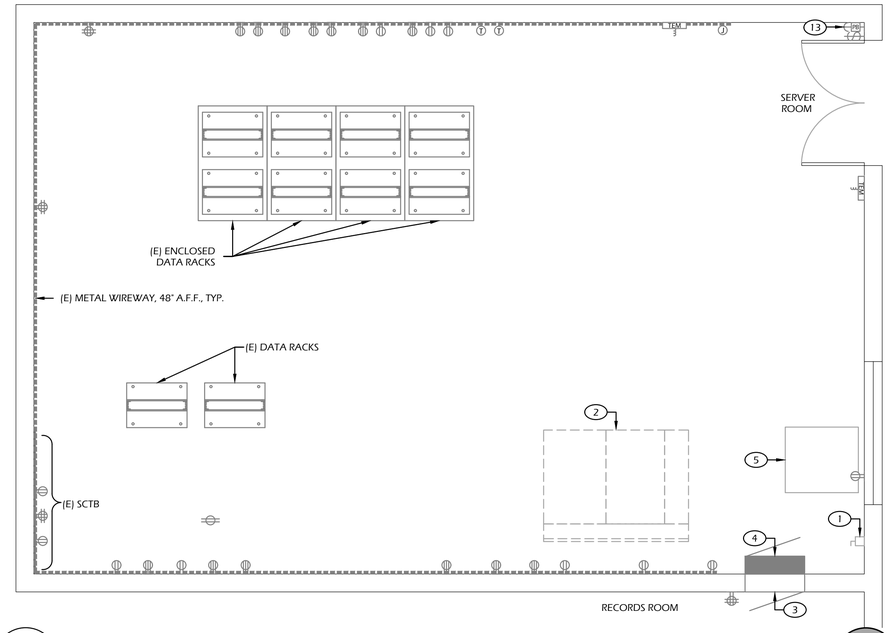

1 - **DEMOLITION SERVER ROOM FLOOR PLAN**
SCALE: 1/2" = 1' - 0"

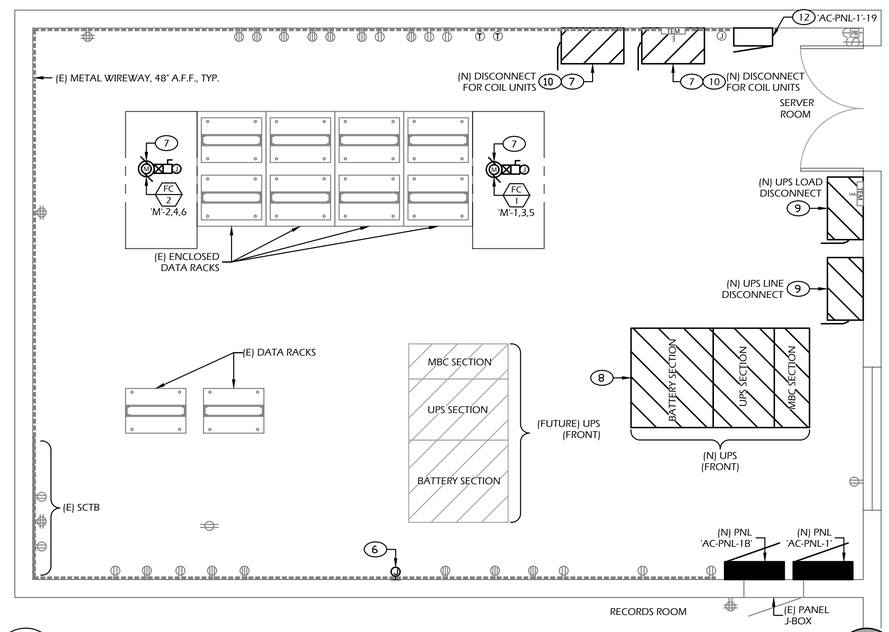

2 - **SERVER ROOM FLOOR PLAN**
SCALE: 1/2" = 1' - 0"

SHEET NOTES

1. DISCONNECT AND REMOVE THE EXISTING UPS SWITCH DISCONNECT AND ASSOCIATED ELECTRICAL DEVICES. PULL ALL CONDUIT AND CONDUCTORS BACK TO SOURCE.
2. DISCONNECT AND REMOVE THE EXISTING 4,000 POUND UPS AND ASSOCIATED BATTERY CABINETS AND REMOVE FROM SITE. PULL ALL CONDUIT AND CONDUCTORS BACK TO SOURCE. PROVIDE AND INSTALL NEW UPS INDICATED.
3. EXISTING PANEL-STYLE J-BOX. REFER TO THE SINGLE LINE DIAGRAM ON SHEET E1.03.
4. EXISTING PANEL 'AC-PNL-1'. DISCONNECT AND REMOVE EXISTING PANEL 'AC-PNL-1' AND REPLACE WITH NEW 'AC-PNL-1'.
5. EXISTING PREVIOUS DATA RACK, NOT USED. DATA RACK TO BE REMOVED. COORDINATE WITH THE DISTRICT.
6. PROVIDE AND INSTALL 2-1/2-INCH CONDUIT FOR THE FUTURE UPS BACK TO THE DISTRIBUTION BOARD 'DBEM2'. REFER TO THE SINGLE LINE DIAGRAM ON SHEET E1.03.
7. ROUTE CIRCUITS FOR FAN COIL THROUGH DISCONNECTS. MOUNT DISCONNECTS BELOW EXISTING SURFACE RACEWAY.
8. REFER TO MECHANICAL DRAWINGS DETAIL G/M4 FOR METHOD OF ATTACHMENT.
9. PROVIDE AND INSTALL NEW PLACARDS TO READ "LINE SIDE UPS DISCONNECT" AND "LOAD SIDE UPS DISCONNECT" INSTALL PLACARD ABOVE THEIR RESPECTIVE DISCONNECTS.
10. PROVIDE AND INSTALL DISCONNECT BELOW THE EXISTING RACEWAY.
11. DISCONNECT THE EXISTING BRANCH CIRCUIT WIRING AND CAP OFF CONDUCTORS. PROVIDE AND INSTALL NEW BRANCH CIRCUIT WIRING TO PANEL AND CIRCUIT INDICATED. EXISTING LIGHTING TO BE ON THE EMERGENCY ELECTRICAL SYSTEM.
12. PROVIDE AND INSTALL (3) #12 AWG CONDUCTORS WITHIN A 3/4" CONDUIT BACK TO PANEL INDICATED TO POWER THE NEW FIRE SUPPRESSION CONTROL PANEL.
13. EXISTING ABANDONED HIGH HEAT ALARM PUSH BUTTON.

Borrelli & Associates, Inc.
Consulting Electrical Engineers
2032 N. Gateway Boulevard
Fresno, CA. 93727
Phone: 559-233-4138
http://www.borrelliengineering.com/
ca-bai@borrelliengineering.com
BA# 20141

REGISTERED PROFESSIONAL ENGINEER JOHN BORRELLI No.E16390 Exp. 6/30/23 ELECTRICAL STATE OF CALIFORNIA

APPROVALS:
APPLICATION #

REGISTERED PROFESSIONAL ENGINEER RYAN W. CARLSON M34846 Exp. 6-30-22 MECHANICAL STATE OF CALIFORNIA

DATE: 05-14-21

MADERA UNIFIED SCHOOL DISTRICT
SERVER ROOM
1902 HOWARD ROAD
MADERA, CA. 93637
CDS #: 20-65243

REVISIONS

LAWRENCE ENGINEERING GROUP
7084 N. Maple Ave., Suite 101
Fresno, CA 93720
(559) 431-0101
FAX (559) 431-1562

TITLE:
SERVER ROOM
ELECTRICAL FLOOR PLANS

SHEET:
E3.01

PROJECT 21052

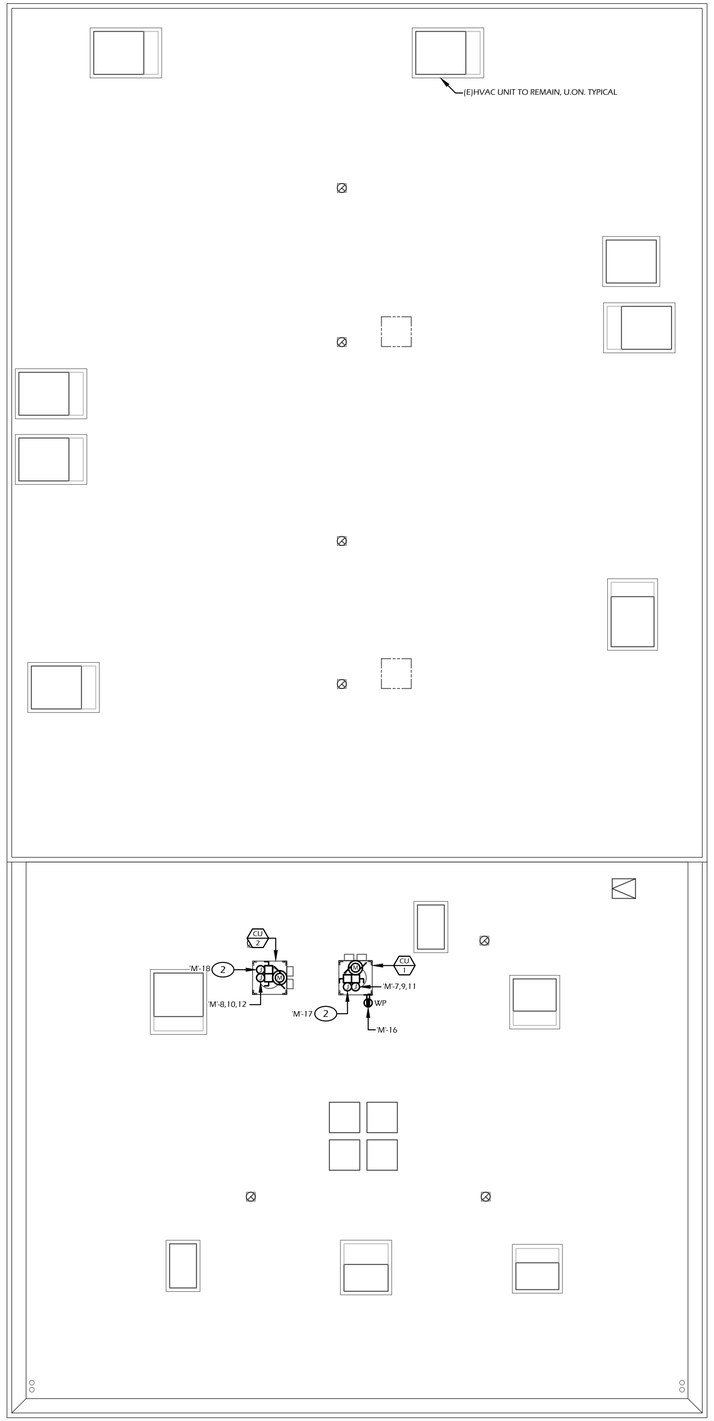

2 ROOF PLAN
SCALE: 1" = 10' - 0"

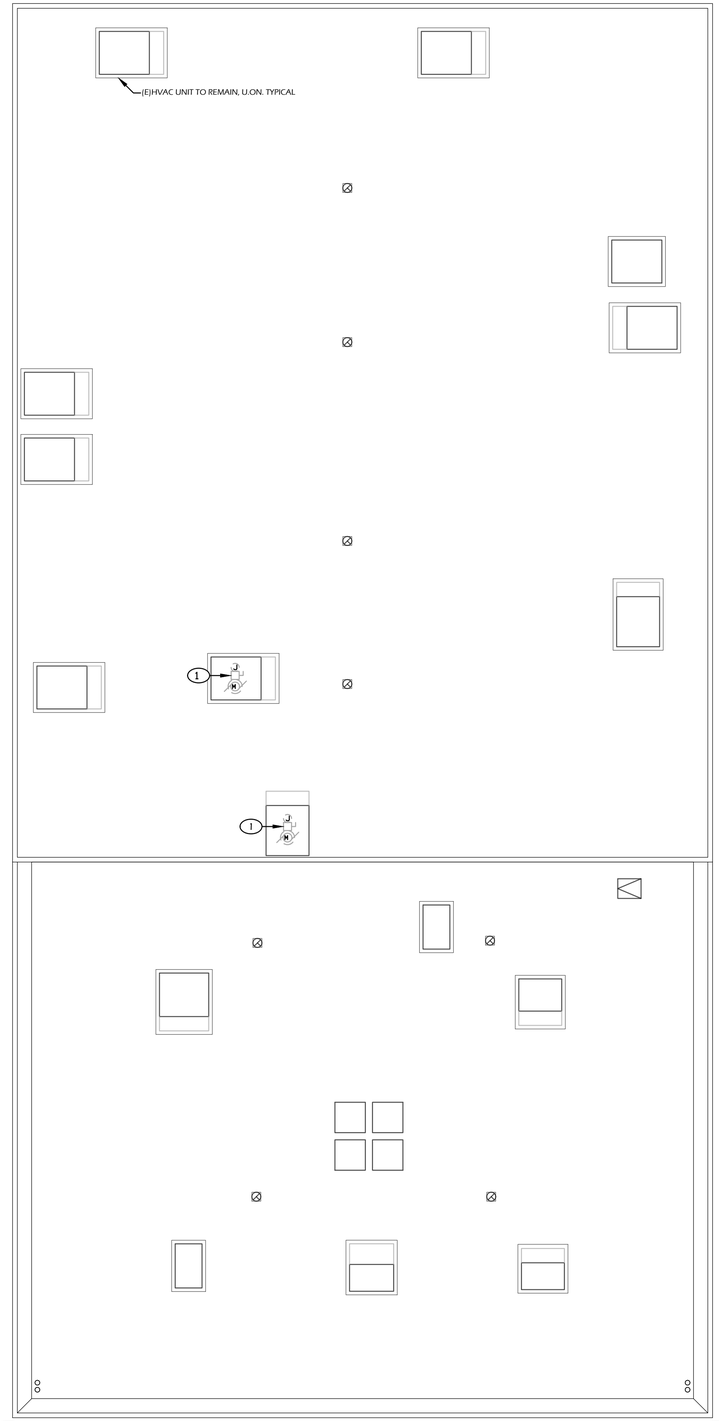

1 DEMOLITION ROOF PLAN
SCALE: 1" = 10' - 0"

SHEET NOTES

1. DISCONNECT AND REMOVE THE EXISTING POWER TO THE EXISTING HVAC UNIT. PULL ALL CONDUCTORS BACK TO SOURCE.
2. PROVIDE AND INSTALL (3)#12 AWG CONDUCTORS WITHIN A 3/4-INCH CONDUIT BACK TO PANEL INDICATED FOR THE HEATER PAD.

Borrelli & Associates, Inc.
Consulting Electrical Engineers
2032 N. Gateway Boulevard
Fresno, CA. 93727
Phone: 559-233-4138
http://www.borrelliengineering.com/
ca-bai@borrelliengineering.com
BAI# 20141

REGISTERED PROFESSIONAL ENGINEER
JOHN BORRELLI
No.E16390
EXP. 6/30/23
ELECTRICAL
CALIFORNIA

APPROVALS:
APPLICATION #

REGISTERED PROFESSIONAL ENGINEER
RYAN W. CARLSON
M34846
Exp. 6-30-22
MECHANICAL
STATE OF CALIFORNIA

DATE: 05-14-21

MADERA UNIFIED SCHOOL DISTRICT
SERVER ROOM
1902 HOWARD ROAD
MADERA, CA. 93637
CDS #: 20-65243

REVISIONS

LAWRENCE ENGINEERING GROUP
7084 N. Maple Ave., Suite 101
(559) 431-9101
Fresno, CA 93720
FAX (559) 431-1562

TITLE:
ELECTRICAL
ROOF PLANS

SHEET:
E3.02

PROJECT 21052

FIRE ALARM RECORD DOCUMENTS CABINET

1. THE FIRE ALARM SYSTEM WORK SHALL INCLUDE A DOCUMENTATION CABINET, INSTALLED AT THE SYSTEM CONTROL PANEL OR OTHER APPROVED LOCATION PER NFPA 72, 7.7.2.
2. THE DOCUMENTATION CABINET SHALL BE RED WITH A HINGED, LOCKING DOOR AND SHALL BE PROMINENTLY LABELED "SYSTEM RECORD DOCUMENTS".
3. ALL RECORD AND TESTING DOCUMENTATION SHALL BE STORED INSIDE THE CABINET.
4. CONTENTS SHALL BE ACCESSIBLE BY AUTHORIZED PERSONNEL ONLY.
5. WHERE CABINET IS INSTALLED IN A LOCATION OTHER THAN THE SYSTEM CONTROL UNIT, ITS LOCATION SHALL BE IDENTIFIED AT THE SYSTEM CONTROL UNIT.
6. PROVIDE SYSTEM DOCUMENTS AS APPLICABLE:
   a. RECORD DRAWINGS/ AS-BUILTS
   b. EQUIPMENT CUT SHEETS AND CA SFM LISTINGS
   c. ALTERNATIVE MEANS AND METHODS
   d. PERFORMANCE BASED DESIGN DOCUMENTATION (NFPA 72, 7.3.7)
   e. SYSTEM RECORD OF COMPLETION AND ANY SUPPLEMENTAL INSPECTION AND TESTING DOCUMENTATION (NFPA 72, 7.8.2)
   f. EMERGENCY RESPONSE PLAN (NFPA 72, 7.3.8)
   g. EVALUATION DOCUMENTATION (NFPA 72, 7.3.9)
   h. RISK ANALYSIS DOCUMENTATION (NFPA 72, 7.3.6)
   i. SOFTWARE AND FIRMWARE CONTROL DOCUMENTATION (NFPA 72, 23.2.2)

CALIFORNIA CODE OF REGULATIONS

PUBLIC SAFETY, STATE FIRE MARSHAL REGULATIONS - CALIFORNIA CODE OF REGULATIONS TITLE 19

2019 CALIFORNIA ADMINISTRATIVE CODE - CALIFORNIA CODE OF REGULATIONS TITLE 24, PART 1 (CAC)

2019 CALIFORNIA BUILDING CODE - CALIFORNIA CODE OF REGULATIONS TITLE 24, PART 2 (CBC)

2019 CALIFORNIA ELECTRICAL CODE - CALIFORNIA CODE OF REGULATIONS TITLE 24, PART 3 (CEC)

2019 CALIFORNIA MECHANICAL CODE - CALIFORNIA CODE OF REGULATIONS TITLE 24, PART 4 (CMC)

2019 CALIFORNIA FIRE CODE - CALIFORNIA CODE OF REGULATIONS TITLE 24, PART 9 (CFC)

2019 CALIFORNIA REFERENCED STANDARDS - CALIFORNIA CODE OF REGULATIONS TITLE 24, PART 12

PARTIAL LIST OF APPLICABLE STANDARDS

2019 CALIFORNIA BUILDING CODE (FOR SFM) NATIONAL STANDARDS SECTION 3504.1.3

NFPA 72	NATIONAL FIRE ALARM CODE (CALIF. AMENDED) (NOTE SEE UL STANDARD 1971 FOR `VISUAL DEVICES')	2016 EDITION

REFERENCE CODE SECTION FOR NFPA STANDARDS - CBC (SFM) 3504.1

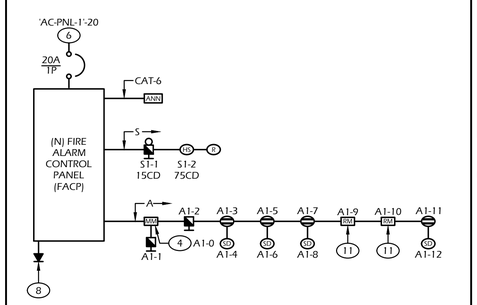

2 - FIRE ALARM RISER DIAGRAM

NOT TO SCALE

SYSTEM DESCRIPTION

1. THE SYSTEM SHOWN IS A NEW MANUAL AND ADDRESSABLE SYSTEM.
2. CLASS B WIRING METHOD IS UTILIZED FOR ALL SIGNALING CIRCUITS.

SCOPE OF FIRE ALARM WORK

THE FIRE ALARM SYSTEM CONSIST OF A FIRE ALARM CONTROL PANEL WITH NEW MANUAL AND ADDRESSABLE SYSTEM WITH AUDIBLE/VISUAL DEVICES FOR NOTIFICATION.

FIRE ALARM OPERATION MATRIX

INPUT	MANUAL PULL STATION		POWER FAILURE	AREA SMOKE DETECTORS	AREA HEAT DETECTORS	FIRE EXTINGUISHING SYSTEM
ANNUNCIATE ALARM AT FACP	●			●	●	●
ANNUNCIATE TROUBLE AT FACP	●	●	●	●	●	●
ANNUNCIATE SUPERVISORY AT FACP		●				●
TRANSMIT SIGNAL TO CENTRAL STATION	●	●	●	●	●	●
ACTIVATE NOTIFICATION APPLIANCES	●			●	●	●
SHUT OFF HVAC	●			●	●	●

FIRE ALARM DEVICE MOUNTING HEIGHTS DETAIL

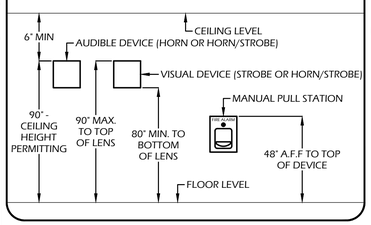

SHEET NOTES (#)

1. PROVIDE AND INSTALL PHOTOELECTRIC DETECTOR AT THE CEILING.
2. PROVIDE AND INSTALL FIXED 190 DEGREES HEAT DETECTOR WITHIN THE ATTIC.
3. COORDINATE WITH THE MECHANICAL ENGINEER FOR THE AGENT RELEASING CONTROL PANEL.
4. PROVIDE AND INSTALL (4) #12 CONDUCTORS TO FIRE SUPPRESSION CONTROL PANEL AND MAKE ALL CONNECTIONS TO INTERFACE IT TO THE NEW FIRE ALARM SYSTEM FOR MONITORING.
5. NOT USED.
6. PROVIDE AND INSTALL A CIRCUIT BREAKER COMPLYING WITH NFPA 72 (RED AND WITH MECHANICAL LOCKING DEVICE) FOR EACH DEDICATED CIRCUIT SUPPLYING POWER TO FIRE ALARM DEVICES. THIS CIRCUIT SHALL BE LABELED ON THE INSIDE OF THE RAT DOOR PROVIDED WITH A CIRCUIT LOCK ACCESSIBLE BY AUTHORIZED PERSONNEL ONLY. CIRCUIT DISCONNECTING MEANS SHALL BE IDENTIFIED AS "FIRE ALARM CIRCUIT". THE CIRCUIT DISCONNECTING MEANS SHALL HAVE A RED MARKING.
7. NOT USED.
8. PROVIDE AND INSTALL TWO CAT-6 CABLES FROM THE FACP TO THE TELEPHONE MPOE. MAKE ALL CONNECTIONS. REFER TO THE SITE PLAN FOR THE EXISTING MPOE LOCATION.
9. PROVIDE AND INSTALL CAT-6 CABLE FROM THE (N) FACP TO THE REMOTE ANNUNCIATOR AND CABLE TYPE A FOR MANUAL PULL STATION IN THE DISTRICT OFFICE ENTRANCE WITHIN A 1-1/4-INCH CONDUIT. REFER TO THE SITE PLAN.
10. MOUNT THE NEW FACP BELOW THE EXISTING WIREWAY.
11. CONNECT TO HVAC UNIT FOR UNIT SHUT-OFF WHEN SMOKE IS DETECTED.

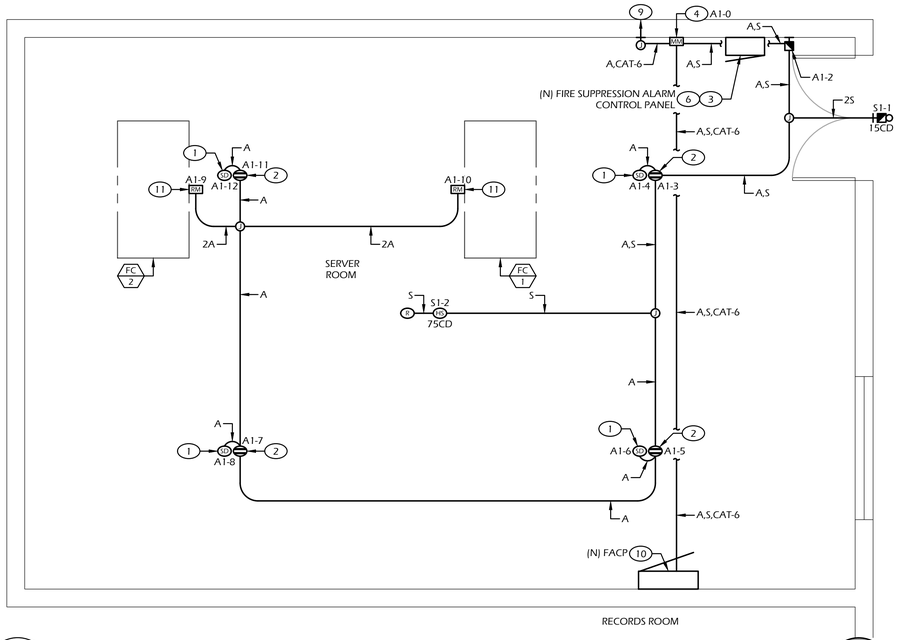

1 - SERVER ROOM FIRE ALARM FLOOR PLAN

SCALE: 1/2" = 1' - 0"

FIRE ALARM SYMBOL LIST

SYMBOL	DEVICE TYPE	MANUFACTURER AND MODEL NUMBER	CSFM LISTING NUMBER
	FIRE ALARM CONTROL PANEL (FACP)	NOTIFIER #NFW-100X	7165-0028:505
ANN	REMOTE ANNUNCIATOR ENCLOSURE	NOTIFIER #N-ANN-80-W NOTIFIER #ANN-SB80KIT-W	7120-0028:240
SD	SMOKE DETECTOR - SPOT TYPE DETECTOR BASE	NOTIFIER #FSP-851 SYSTEM SENSOR #B210LP	7272-0028:206 7300-1653:109
	190°F FIXED HEAT DETECTOR DETECTOR BASE	NOTIFIER #FST-851H SYSTEM SENSOR #B210LP	7270-0028:196 7300-1653:109
	190° LINEAR HEAT DETECTOR	PROTECTOWIRE #PHSC-190-EPC	7270-0854:101
MM	MONITOR MODULE	NOTIFIER #FMM-1	7300-0028:219
RM	RELAY MODULE	NOTIFIER #FRM-1	7300-0028:219
	MANUAL PULL STATION	NOTIFIER #NBG-12LX	7150-0028:199
	MULTI-CANDELA HORN/STROBE - WALL MOUNTED	WHEELOCK #LHSR3	7135-0785:501
	MULTI-CANDELA HORN/STROBE - CEILING MOUNTED	WHEELOCK #LHSRC3	7135-0785:501
R	END OF LINE RESISTOR 3.9KΩ	VARIOUS	N/A
CABLE LEGEND			
A	INITIATION CABLE ABOVE GROUND	WEST-PENN #D990 — 16 AWG	7161-0859:0101
S	SIGNAL CABLE ABOVE GROUND	WEST-PENN #998 — 12 AWG	7161-0859:0101

NOTES:
1. PROVIDE ALL ACCESSORIES FOR FULLY FUNCTIONAL SYSTEM.

FIRE ALARM SYSTEM NOTES

1. ALL WORK AND MATERIALS SHALL COMPLY WITH THE LATEST REGULATIONS OF THE STATE FIRE MARSHAL, CALIFORNIA CODE OF REGULATIONS, SERVING UTILITY COMPANIES, AND OTHER APPLICABLE STATE ORDINANCES. NOTHING IN THESE PLANS OR SPECIFICATIONS IS TO BE CONSTRUED AS TO PERMIT WORK NOT CONFORMING TO THESE CODES. WHERE WORK OF A HIGHER DEGREE IS INDICATED IN THE PLANS OR SPECIFICATIONS THIS REQUIREMENT SHALL GOVERN.
2. ALARM INDICATING DEVICES OF A FIRE ALARM SYSTEM INTENDED TO ALERT ALL OCCUPANTS SHALL BE SO LOCATED AND UNOBSTRUCTED AS TO CAUSE A LEVEL OF AUDIBILITY OF NOT LESS THAN 15 DB ABOVE AMBIENT NOISE LEVELS MEASURED FOUR FEET ABOVE THE FLOOR INSIDE BUILDING. AMBIENT NOISE LEVELS SHALL BE CONSTRUED TO MEAN THAT WHICH CAN NORMALLY BE EXPECTED TO EXIST WHEN THE FACILITY, BUILDING, ROOM OR AREA IS FUNCTIONING UNDER NORMAL OPERATIVE OR WORKING CONDITIONS.
3. UPON COMPLETION OF THE INSTALLATION OF THE FIRE PROTECTIVE SIGNALING EQUIPMENT, A SATISFACTORY TEST OF THE ENTIRE SYSTEM SHALL BE MADE IN THE PRESENCE OF THE ENFORCING FIRE AGENCY PER CHAPTER 14, NFPA 72, AND A CERTIFICATE OF COMPLETION SHALL BE PROVIDED TO THE OWNER PER CHAPTER 7, NFPA 72 AND THE CALIFORNIA FIRE CODE, SECTION 907.7.
4. THE FIRE ALARM SYSTEM SHALL CONFIRM TO ARTICAL 760 OF THE CALIFORNIA ELECTRICAL CODE AND SECTION 907 OF THE CALIFORNIA FIRE CODE.
5. ALL AUDIBLE AND VISUAL DEVICES SHALL BE SYNCHRONIZED.
6. ALL FIRE PROTECTION SIGNALING COMPONENTS SHALL BE ONLY THOSE APPROVED AND LISTED IN THE STATE FIRE MARSHAL'S LISTING SERVICE. AN ITEMIZED MATERIALS LIST SHOWING MAKE, MODEL NUMBER AND ITS CORRESPONDING STATE FIRE MARSHAL'S LISTING NUMBER SHALL BE FURNISHED TO THE PROJECT INSPECTOR. UPON COMPLETION OF THE INSTALLATION OF THE FIRE PROTECTIVE SIGNALING EQUIPMENT, A SATISFACTORY TEST OF THE ENTIRE SYSTEM SHALL BE MADE IN THE PRESENCE OF THE LOCAL FIRE AUTHORITY WITH I.O.R. INSTALLATION REQUIREMENTS SHALL BE PER NFPA 72, CALIFORNIA BUILDING CODE, AND CALIFORNIA FIRE CODE.
7. THE FIRE ALARM SYSTEM SHALL TRANSMIT THE ALARM, SUPERVISORY, AND TROUBLE SIGNALS TO AN APPROVED SUPERVISING STATION IN ACCORDANCE WITH NFPA 72. THE SUPERVISING STATION SHALL BE LISTED AS EITHER UUFX (CENTRAL STATION) OR UUJS (REMOTE AND PROPRIETARY) BY UNDERWRITERS LABORATORY (UL) OR SHALL COMPLY WITH THE REQUIREMENTS OF STANDARD FM 3011.
8. AFTER SUCCESSFUL TESTING OF THE FIRE ALARM SYSTEM, COMPLETE THE NFPA 72 RECORD OF COMPLETION AND PROVIDE COPIES TO THE DESIGN PROFESSIONAL, OWNER, AND LOCAL FIRE AUTHORITY.
9. HVAC SHUT-OFF SHALL OCCUR AT ALL AC UNIT LOCATIONS WHERE DUCT DETECTORS OR RELAY MODULE LOCATIONS ARE INDICATED. THE FIRE ALARM CONTRACTOR WILL PROVIDE THE DUCT DETECTOR OR RELAY MODULE FOR INSTALLATION BY THE MECHANICAL CONTRACTOR. THE FIRE ALARM CONTRACTOR WILL MAKE THE FIRE ALARM CONNECTIONS. THE MECHANICAL CONTRACTOR SHALL MAKE THE HVAC SHUT OFF CONNECTIONS FROM THE DUCT DETECTOR OR RELAY MODULE TO THE HVAC SHUT OFF RELAY.

FIRE ALARM PLAN SUBMITTAL NOTE

THE FIRE ALARM PLANS ARE FOR BIDDING PURPOSES ONLY. THE FIRE ALARM CONTRACTOR SHALL SUBMIT THEIR SET OF FIRE ALARM PLANS TO THE LOCAL FIRE MARSHAL WITH FULL VOLTAGE DROP AND BATTERY CALCULATIONS CSFM LISTING AND DATA SHEETS AS REQUIRED TO OBTAIN APPROVAL WHERE THE PROJECT IS BEING CONSTRUCTED FOR THEIR REVIEW AND APPROVAL. ANY ADJUSTMENTS NEEDED SHALL TO BE MADE ACCORDINGLY. AFTER APPROVAL A SEPARATE PERMIT FOR THE FIRE ALARM SYSTEM SHALL BE ISSUED. THE FIRE ALARM SYSTEM PERMIT SHALL NOT RIDE ON THE BUILDING PERMIT.

Borrelli & Associates, Inc.
Consulting Electrical Engineers
2032 N. Gateway Boulevard
Fresno, CA. 93727
Phone: 559-233-4138
http://www.borrelliengineering.com/
ca-bai@borrelliengineering.com
BAI# 20141

REGISTERED PROFESSIONAL ENGINEER JOHN BORRELLI No.E16390 EXP. 6/30/23 ELECTRICAL CALIFORNIA

APPROVALS:
APPLICATION #

REGISTERED PROFESSIONAL ENGINEER RYAN W. CARLSON M34846 Exp. 6-30-22 MECHANICAL STATE OF CALIFORNIA

DATE: 05-14-21

MADERA UNIFIED SCHOOL DISTRICT
SERVER ROOM
1902 HOWARD ROAD
MADERA, CA. 93637

CDS #: 20-65243

REVISIONS

LAWRENCE ENGINEERING GROUP
7084 N. Maple Ave., Suite 101
(559) 431-9101
Fresno, CA 93720
FAX: (559) 431-1562

TITLE:
FIRE ALARM FLOOR PLAN
AND SYSTEM INFORMATION

SHEET:
E3.03

PROJECT 21052

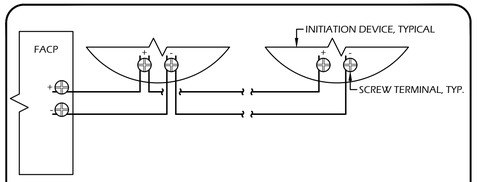

1 -

FIRE ALARM INITIATION DEVICE WIRING DIAGRAM

NOT TO SCALE

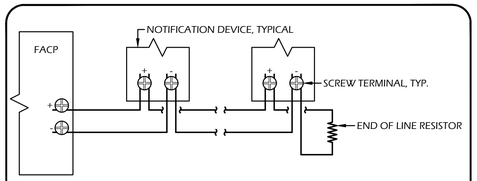

2 -

FIRE ALARM NOTIFICATION DEVICE WIRING DIAGRAM

NOT TO SCALE

Project: MADERA USD Circuit : S1 VISUAL

Device Label	AV15	AV75C	-	-	-	-	-	-	-	-
Device Number	1	2	3	4	5	6	7	8	9	10
Wire Gauge	12	12	12	12	12	12	12	12	12	12
Distance in Feet	48.000	19.000	25.000	31.000	43.000	19.000	34.000	24.000	30.000	14.000
Amps @ Device	0.034	0.169	0.000	0.000	0.000	0.000	0.000	0.000	0.000	0.000
Running Amps	0.203	0.169	0.000	0.000	0.000	0.000	0.000	0.000	0.000	0.000
Voltage Drop	0.038	0.013	0.000	0.000	0.000	0.000	0.000	0.000	0.000	0.000
Volts at Device	20.362	20.349	20.349	20.349	20.349	20.349	20.349	20.349	20.349	20.349

Total Current	=	0.203	Amps
Total Distance	=	325.00	Ft
Total Voltage Drop	=	0.05	Volts
85% of Nominal Voltage	=	20.4	Volts
% Voltage Drop	=	0.25	%
% Spare Voltage Drop	=	21.32	%

Legend

Symbol	Model	Description
AV15	LHSR3	Horn/Strobe
AV30	LHSR3	Horn/Strobe
AV75	LHSR3	Horn/Strobe
AV110	LHSR3	Horn/Strobe

Formula: V =(2K X L X I)/CMIL
K=12.9, L=Dist. in ft., I=Current

Wire Size	/M FT.	Circular Mils
10	1.018	10380
12	1.59	6530

FIRE ALARM PANEL CALCULATIONS

Device Type: FACP		Amount		Supv. I	Supv. I_T	Alarm I	Alarm I_T
Fire Alarm Control Panel			1	0.1910	0.1910	0.3070	0.3070
Remote Annunciator			1	0.0400	0.0400	0.0400	0.0400
Pull station			2	0.0004	0.0008	0.0050	0.0100
Smoke Detector			4	0.0004	0.0014	0.0069	0.0274
Hattic Heat Detector			4	0.0003	0.0012	0.0068	0.0272
Relay Module			2	0.0004	0.0008	0.0004	0.0008
Monitor Module			1	0.0003	0.0003	0.0051	0.0051
15cd Wall Horn & Strobe	AV15	1	1	0.0000	0.0000	0.0340	0.0340
30cd Wall Horn & Strobe	AV30	0	0	0.0000	0.0000	0.0460	0.0000
75cd WallHorn & Strobe	AV75	0	0	0.0000	0.0000	0.1050	0.0000
15cd Ceiling Horn & Strobe	AV15C	0	0	0.0000	0.0000	0.0440	0.0000
30cd Ceiling Horn & Strobe	AV30C	0	0	0.0000	0.0000	0.0610	0.0000
75cd Ceiling Horn & Strobe	AV75C	1	1	0.0000	0.0000	0.1690	0.1690
Totals					0.2354		0.6205
Minimun runtime on batteries				24	HRS	15.0000	MIN.
Subtotal battery standby (Amp-Hours)					5.6498		0.1551
Total battery standby (Amp-Hours)							5.8050
125% Safety Factor							125.00%
Minimum Capacity (Amp-Hours)							7.2562
Battery Size (Amp-Hours)							8

Borrelli & Associates, Inc.
Consulting Electrical Engineers
2032 N. Gateway Boulevard
Fresno, CA. 93727
Phone: 559-233-4138
http://www.borrelliengineering.com/
ca-bai@borrelliengineering.com
BAI# 20141

REGISTERED PROFESSIONAL ENGINEER JOHN BORRELLI No.E16390 EXP. 6/30/23 ELECTRICAL CALIFORNIA

APPROVALS:
APPLICATION #

REGISTERED PROFESSIONAL ENGINEER RYAN W. CARLSON M34846 Exp. 6-30-22 MECHANICAL STATE OF CALIFORNIA

DATE: 05-14-21

MADERA UNIFIED SCHOOL DISTRICT
SERVER ROOM
1902 HOWARD ROAD
MADERA, CA. 93637

CDS #: 20-65243

REVISIONS

LAWRENCE ENGINEERING GROUP
7084 N. Maple Ave., Suite 101
(559) 431-9101
Fresno, CA 93720
FAX (559) 431-1562

TITLE:
FIRE ALARM CALCULATIONS, VOLTAGE DROPS, AND DETAILS

SHEET:
E3.04

PROJECT 21052

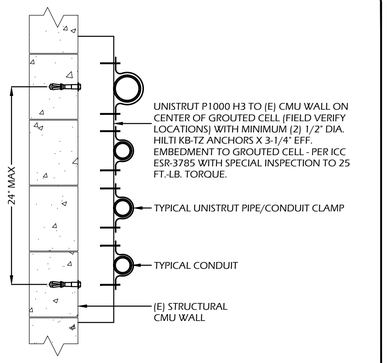

CONDUIT SUPPORT ON CMU WALL DETAIL

9 -

NOT TO SCALE

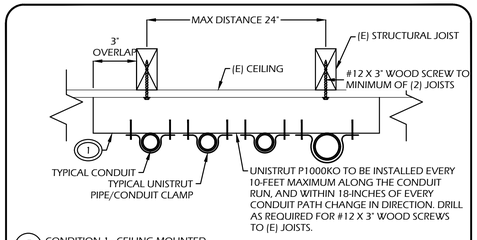

A CONDITION 1 - CEILING MOUNTED
CEILING JOIST PARALLEL TO CONDUIT RUN

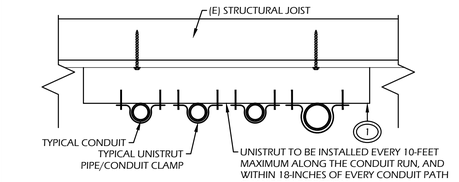

B CONDITION 2 - CEILING MOUNTED
CEILING JOIST PERPENDICULAR TO CONDUIT RUN

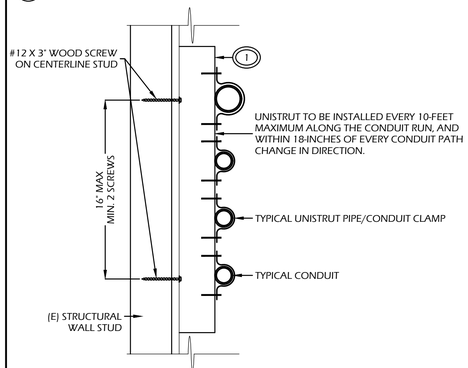

C CONDITION 3 - WALL MOUNTED

DETAIL NOTES

1. PROVIDE AND INSTALL UNISTRUT #P1000KO WITH INDICATED SCREWS. PROVIDE AND INSTALL WASHERS.

GENERAL NOTES

1. THIS DETAIL IS APPLICABLE FOR CONDUITS LESS THAN 2-1/2-INCH IN DIAMETER.
2. ALL OUTDOOR EQUIPMENT SHALL BE GALVANIZED.
3. QUANTITY OF INDOOR CONDUIT MAY VARY, MAXIMUM OF 8; MAXIMUM OF 2 OUTDOOR.
4. MAXIMUM SIZE OF INDOOR CONDUIT IS 1". MAXIMUM SIZE OF OUTDOOR CONDUIT IS 1-1/2".

TYPICAL CONDUIT SUPPORT DETAIL

7 -

NOT TO SCALE

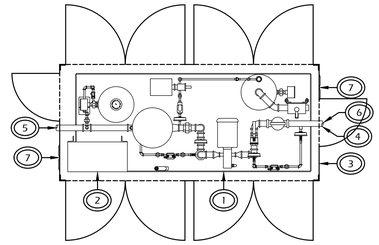

A PLAN VIEW

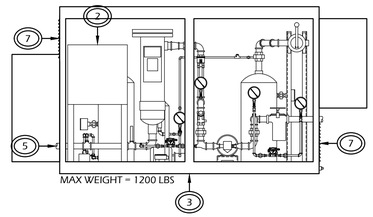

B FRONT ELEVATION WITH DOORS OPEN

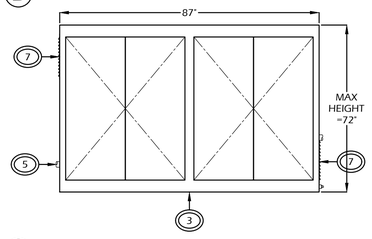

C FRONT ELEVATION WITH DOORS CLOSED

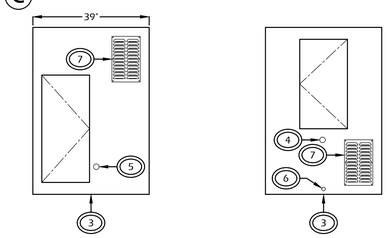

D LEFT ELEVATION WITH DOORS CLOSED

E RIGHT ELEVATION WITH DOORS CLOSED

DETAIL NOTES

1. PROVIDE AND INSTALL PREFERRED UTILITIES MANUFACTURING #PF-501-CA-01-WR-01 OR APPROVED EQUAL FUEL MAINTENANCE SYSTEM.
2. ADJUST LOCATION OF CONTROL PANEL.
3. PROVIDE AND INSTALL WEATHERPROOF ENCLOSURE. ENCLOSURE SHALL BE POWDER COATED STEEL. PLANS SHALL BE STAMPED AND SIGNED BY A REGISTERED STRUCTURAL ENGINEER.
4. INLET PIPE
5. OUTLET PIPE
6. CONTAINMENT BASIN DRAIN PIPE
7. LOUVER

FUEL MAINTENANCE SYSTEM ENCLOSURE

6 -

NOT TO SCALE

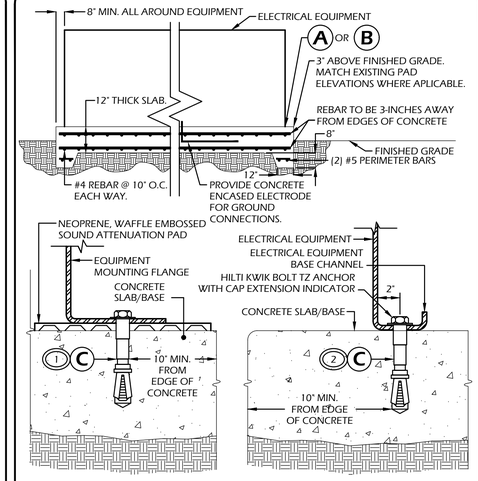

A MOUNTING WITH SOUND PAD DETAIL
TRANSFORMER INSTALLATIONS

B MOUNTING WITHOUT SOUND PAD DETAIL
DIST.BOARD, MAIN SWITCHBOARDS, ETC.

EQUIPMENT	QTY.	ANCHOR DIAMETER	TORQUE (FT-LB)	EMBEDMENT DEPTH (IN)
TRANSFORMER	8	3/8"	25	2-3/4
ATS 'AT1'	8	1/2"	40	3-1/4
ATS 'AT2'	8	1/2"	40	3-1/4
GENERATOR	6	3/4"	110	4-3/4
FUEL MAINTENANCE SYSTEM	4	3/4"	110	4-3/4
FUEL TANK	4	3/4"	110	4-3/4
DISTRIBUTION BOARD 'DBEM1'	4	5/8"	60	4
DISTRIBUTION BOARD 'DBEM2'	4	5/8"	60	4

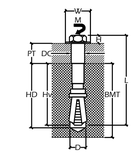

C ANCHOR DETAIL

NOTES:
1. EXPANSION ANCHORS SHALL BE STAINLESS STEEL HILTI KWIK-BOLT TZ.
2. KWIK BOLT TZ EXPANSION ANCHORS SHALL BE INSTALLED IN HOLES DRILLED WITH HILTI CARBIDE TIPPED DRILL BITS. ANCHORS SHALL BE INSTALLED AND TORQUED PER MANUFACTURERS RECOMMENDATIONS.
3. ANCHOR SIZES, QUANTITIES, AND TORQUES SHALL BE PER TABLES.
4. REFER TO ESR-1917 REPORT FOR FURTHER REQUIREMENTS.
5. ALL CONCRETE SHALL HAVE 3000 PSI STRENGTH AT 28 DAYS.
6. ALL KB-TZ ANCHORS SHALL BE INSTALLED WITH 'SPECIAL INSPECTION' AND TORQUE TESTED WITHOUT FAILURES PER ICC SPECIFICATIONS AND LISTED TORQUE. IF ANY ANCHOR SHOULD FAIL THE TORQUE TEST, THE UNIT SHALL BE MOVED TO OFFSET FROM THE FAILED HOLE LOCATION BY THE DISTANCE PROVIDED BY THE ENGINEER AND ANCHORS RE-INSTALLED, OR OTHERWISE PROVIDE ADDITIONAL MOUNTING HOLE IN UNIT BASE PER ENGINEER'S AND MANUFACTURER'S APPROVAL.

FREESTANDING ELECTRICAL EQUIPMENT TYPICAL FOR ALL GROUND MOUNTED EQUIPMENT

4 -

NOT TO SCALE GB20-01-27

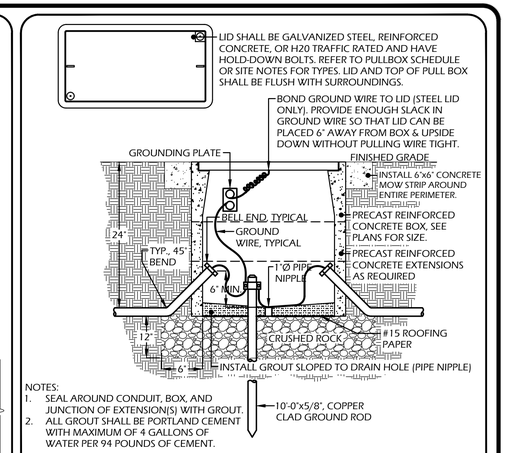

NOTES:
1. SEAL AROUND CONDUIT, BOX, AND JUNCTION OF EXTENSION(S) WITH GROUT.
2. ALL GROUT SHALL BE PORTLAND CEMENT WITH MAXIMUM OF 4 GALLONS OF WATER PER 94 POUNDS OF CEMENT.

PULL BOX DETAIL

1 -

NOT TO SCALE GB30-01-01

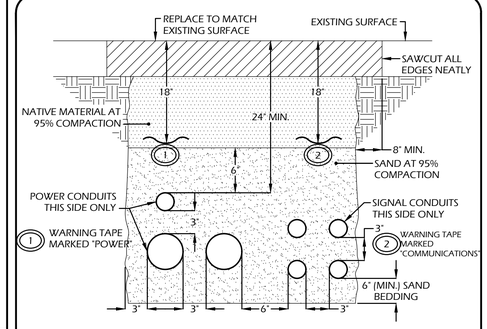

TRENCH DETAIL WITHOUT SPACERS AND UNDER EXISTING SURFACE EXTERIOR NON-CONCRETE SURFACE CONDITIONS

2 -

NOT TO SCALE

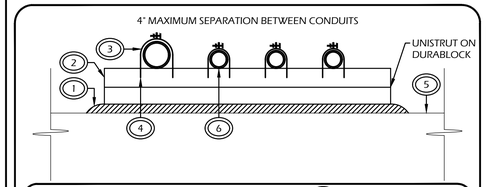

DETAIL NOTES

1. CLEAN OFF ROOF AREA. APPLY ONE LAYER OF CAP SHEET & SET IN COLD MASTIC.
2. PROVIDE AND INSTALL DURABLOCK SLEEPER TO SUIT NUMBER OF CONDUITS (MINIMUM LENGTH, 1'-0").
3. PROVIDE AND INSTALL CONDUIT STRAP ONE SIZE LARGER THAN CONDUIT FOR EACH CONDUIT. NOTE EVERY FOURTH SUPPORT SHALL HAVE CONDUIT STRAP SIZE FOR CONDUIT.
4. FASTEN TYPICAL UNISTRUT 'P' SERIES PIPE CLAMP FOR RIGID STEEL CONDUIT TO UNISTRUT.
5. EXISTING ROOF
6. CONDUIT

TYPICAL ROOF CONDUIT SUPPORT DETAIL

5 -

NOT TO SCALE

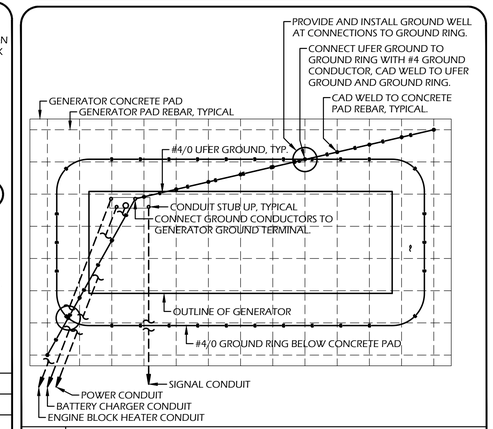

GENERATOR GROUNDING DETAIL

3 -

NOT TO SCALE

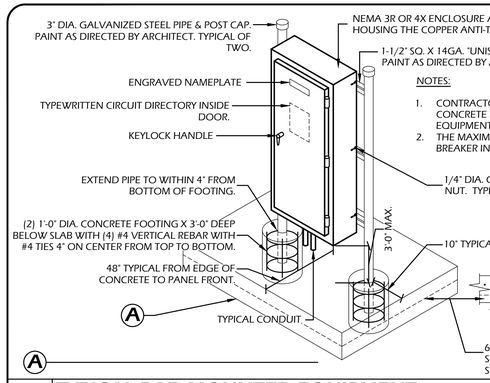

A

TYPICAL PAD MOUNTED EQUIPMENT

8 -

NOT TO SCALE

Borrelli & Associates, Inc.
Consulting Electrical Engineers
2032 N. Gateway Boulevard
Fresno, CA. 93727
Phone: 559-233-4138
http://www.borrelliengineering.com/
ca-bai@borrelliengineering.com
BAI# 20141

REGISTERED PROFESSIONAL ENGINEER JOHN BORRELLI No.E16390 EXP. 6/30/23 ELECTRICAL CALIFORNIA

APPROVALS:
APPLICATION #

REGISTERED PROFESSIONAL ENGINEER RYAN W. CARLSON M34846 Exp. 6-30-22 MECHANICAL STATE OF CALIFORNIA

DATE: 05-14-21

MADERA UNIFIED SCHOOL DISTRICT
SERVER ROOM
1902 HOWARD ROAD
MADERA, CA. 93637

CDS #: 20-65243

REVISIONS

LAWRENCE ENGINEERING GROUP
7084 N. Maple Ave., Suite 101
Fresno, CA 93720
(559) 431-1900
FAX (559) 431-1902

TITLE: TYPICAL ELECTRICAL DETAILS

SHEET: E4.01

PROJECT 21052

DRAWING: VD125-02FT4-HSD

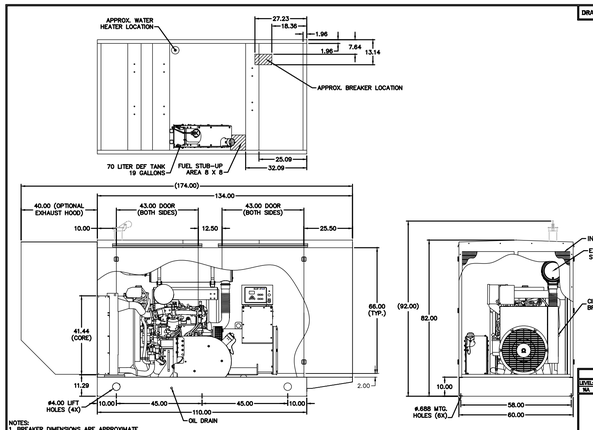

NOTES:
1. BREAKER DIMENSIONS ARE APPROXIMATE
2. RADIATORE CORE WIDTH: 35.40"
3. FUEL SUPPLY: 1/2" FUEL RETURN: 3/8"
4. UNIT OFFSET 4.00" TOWARDS RIGHT SIDE
5. (OPTIONAL): EXHAUST HOOD INCLUDED LEVEL 3 ENCLOSURE ONLY
6. (OPTIONAL): EXHAUST ROUTED THROUGH EXHAUST HOOD LEVEL 3 ENCLOSURE ONLY
7. (OPTIONAL): SOUND ATTENUATION FOAM INCLUDED LEVEL 2 & 3 ENCLOSURES ONLY
8. (XX.XX) DIMENSIONS ARE FOR REFERENCE ONLY

REVISIONS:

LEVEL	DESCRIPTION	DATE	BY
NA	NA	NA	NA

BLUE STAR Power Systems Inc.

ENG: TAD572VE GEN: 431
RAD: W/ENG BASE: 2-0361 HSK: WPE-109
DATE: 12-28-15 BY: KAP DRAWN TO SCALE

Borrelli & Associates, Inc.
Consulting Electrical Engineers
2032 N. Gateway Boulevard
Fresno, CA. 93727
Phone: 559-233-4138
http://www.borrelliengineering.com/
ca-bai@borrelliengineering.com
BAI# 20141

REGISTERED PROFESSIONAL ENGINEER JOHN BORRELLI No.E16390 EXP. 6/30/23 ELECTRICAL CALIFORNIA

APPROVALS:
APPLICATION #

REGISTERED PROFESSIONAL ENGINEER RYAN W. CARLSON M34846 Exp. 6-30-22 MECHANICAL STATE OF CALIFORNIA

DATE: 05-14-21

MADERA UNIFIED SCHOOL DISTRICT
SERVER ROOM
1902 HOWARD ROAD
MADERA, CA. 93637

CDS #: 20-65243

REVISIONS

LAWRENCE ENGINEERING GROUP
7084 N. Maple Ave., Suite 101
(559) 431-9101
Fresno, CA 93720
FAX (559) 431-1562

TITLE:
TYPICAL ELECTRICAL
DETAILS

SHEET:
E4.02

PROJECT 21052

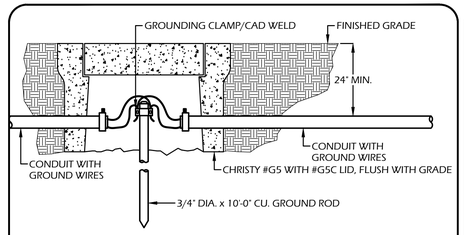

A NON-GROUNDING RING

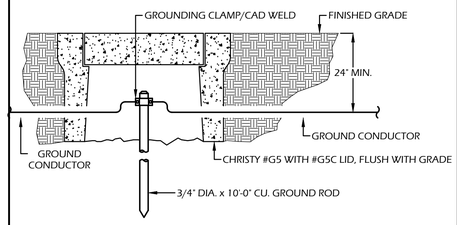

B GROUND RING

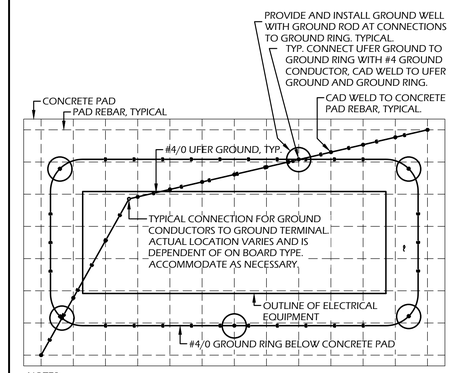

NOTES:
1. SIZE PAD TO ACCOMMODATE THE FREESTANDING ELECTRICAL EQUIPMENT.
2. ALLOW AND PROVIDE AND INSTALL 4-FOOT OF CONCRETE LANDING SPACE DIRECTLY IN FRONT OF THE FREE STANDING EQUIPMENT.
3. UTILIZE UFER GROUND 1/2" REBAR ENCASED IN CONCRETE MINIMUM 30' REBAR.

C WHERE GROUND ROD CANNOT BE INSTALLED

5 TYPICAL GROUND WELL PULL BOX CONCRETE PAD GROUNDING FOR FREESTANDING ELECTRICAL EQUIPMENT

NOT TO SCALE GB30-01-06

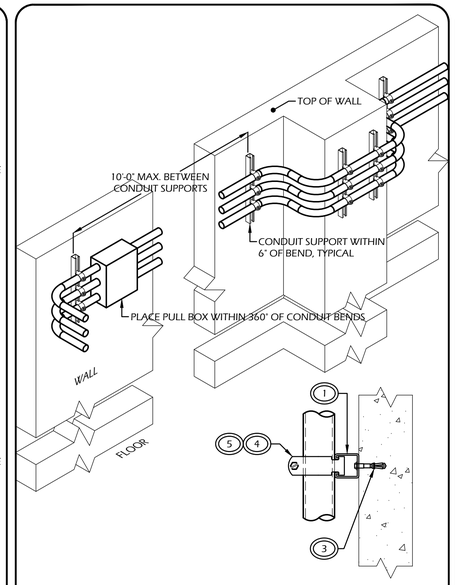

NOTES:
1. CONDUIT SUPPORTS SHALL BE UNISTRUT P1000HS-HG OR APPROVED EQUAL.
2. CONDUIT SUPPORTS SHALL EXTEND 3" BEYOND CONDUITS.
3. MOUNT CONDUIT SUPPORTS TO WALL WITH HILTI 1/2"x3-3/4", STAINLESS STEEL KWIK-BOLT TZ EXPANSION ANCHORS. EACH SUPPORT SHALL BE FASTENED IN PLACE WITH A MINIMUM OF TWO BOLTS. TORQUE PER ICC-ES ESR-1917. BOLT SPACING SHALL NOT EXCEED 12", FOR CMU WALLS, INSTALL BOLTS AS CLOSE TO CENTER OF THE BLOCKS AS POSSIBLE.
4. MOUNT CONDUITS TO CONDUIT SUPPORTS WITH ELECTRO-GALVANIZED UNISTRUT, OR APPROVED EQUAL, PIPE CLAMPS. MODEL NUMBERS OF CLAMPS WILL VARY DEPENDING ON SIZE AND TYPE OF CONDUITS.
5. THE CONDUIT SUPPORTS AND PIPE CLAMPS SHALL BE MADE BY THE SAME MANUFACTURER.
6. MOUNT CONDUIT NEAR TOP OF WALL UNLESS OTHERWISE NOTED.
7. PROVIDE A PULL BOX ON EACH SIDE OF A COLUMN OR OTHER OBSTRUCTION REQUIRING BENDS IN THE CONDUITS.
8. COORDINATE WITH THE STRUCTURAL PLANS.

3 TYPICAL CONDUIT MOUNTING AT CONCRETE OR CMU WALL OR HORIZONTAL MOUNTING

NOT TO SCALE

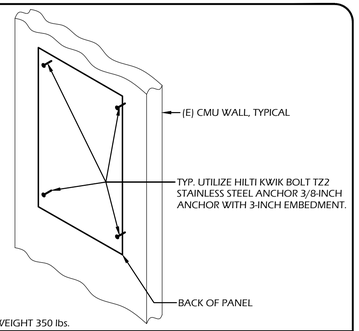

NOTES:
1. MAXIMUM WEIGHT 350 lbs.

4 WALL MOUNTED DISCONNECT MOUNTING DETAIL

NOT TO SCALE

NOTE:
OVERALL SHIPPING DIMENSION: 9'-9" L X 6'-2" W X 5'-11" H

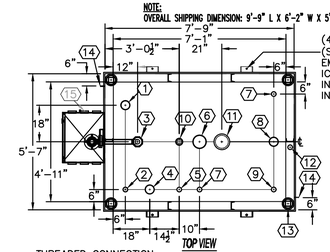

(4) 3/4" DIA. HILTI KB-TZ (S.S.) X 4-3/4" EFF. EMBEDMENT – INSTALL PER ICC ESR-1917 WITH SPECIAL INSPECTION & 110 FT.-LB. INSTALL TORQUE.

ITEM	SIZE	SUGGESTED FUNCTION
1	4"	PHASE 1 VAPOR RECOVERY/SPARE
2	2"	MECHANICAL GAUGE
3	4"	FILL
4	4"	ELECTRONIC LEVEL GAUGE
5	2"	PRIMARY WORKING VENT
6	6"	PRIMARY TANK EMERGENCY VENT
7	2"	SPARE
8	4"	SUBMERSIBLE PUMP
9	2"	SUCTION PUMP/SPARE
10	2"	SECONDARY WORKING VENT
11	6"	SECONDARY CONTAINMENT EMERGENCY VENT
12	2"	SECONDARY MONITOR PIPE
13	4"	FIRE RATED MATERIAL FILL
14	2" X 2"	GROUND CLIP, DWG."MCB004"
15	2" PIPE	REMOTE FILL BOX, DWG."SBB004"

TANK SPECIFICATIONS
VENTING CAPACITY: PRIMARY TANK - 147,000 CUBIC FEET PER HOUR
SECONDARY TANK - 190,000 CUBIC FEET PER HOUR
MATERIAL: PRIMARY TANK - 3/16" THICK
SECONDARY TANK - 3/16" THICK

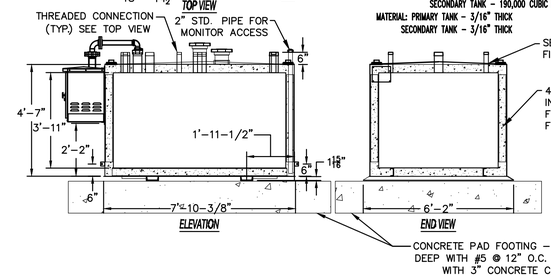

PRODUCT CODE	GALLONS	DESCRIPTION	OVERALL SIZE	SHIP WT.
V4AA101MVS592	1,000	U/L-2085 ABOVE GROUND VAULT TANK	7'-9"L X 5'-7"W X 4'-9"H	8,800 LBS.

CONTAINMENT SOLUTIONS

CUSTOMER NAME

APPROVED BY: DATE:

DRAWN BY: D. ROVANC | DATE DRAWN: 02-04-09
DWG NUMBER: S103662 | SCALE: 1:36
REV'D | REV BY:DAR | DATE: 01-01-14| SHEET:1 OF 1

1 CONTAINMENT SOLUTIONS 1000 GALLON UL-2085 ABOVE GROUND VAULT TANK W/ SPILL-BOX DETAILS

NOT TO SCALE

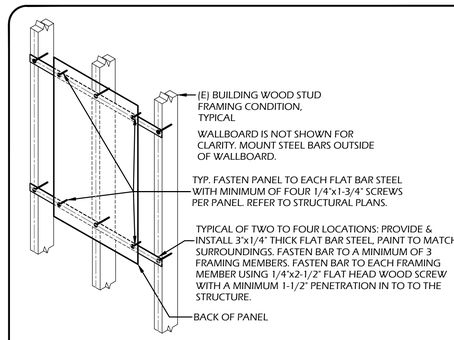

ANCHORING			
QTY.	DIA.	TYPE	LENGTH
4	1/4"	SCREW	2-1/2"

2 WALL MOUNTED ELECTRICAL EQUIPMENT MOUNTING DETAIL FOR WOOD FRAMEWORK

NOT TO SCALE

Borrelli & Associates, Inc.
Consulting Electrical Engineers
2032 N. Gateway Boulevard
Fresno, CA. 93727
Phone: 559-233-4138
http://www.borrelliengineering.com/
ca-bai@borrelliengineering.com
BAI# 20141

REGISTERED PROFESSIONAL ENGINEER JOHN BORRELLI No.E16390 EXP. 6/30/23 ELECTRICAL CALIFORNIA

APPROVALS:
APPLICATION #

REGISTERED PROFESSIONAL ENGINEER RYAN W. CARLSON M34846 Exp. 6-30-22 MECHANICAL STATE OF CALIFORNIA

DATE: 05-14-21

MADERA UNIFIED SCHOOL DISTRICT
SERVER ROOM
1902 HOWARD ROAD
MADERA, CA. 93637

CDS #: 20-65243

REV/SIONS

LAWRENCE ENGINEERING GROUP
7084 N. Maple Ave., Suite 101
Fresno, CA 93720
(559) 431-1101
FAX (559) 431-1562

TITLE: TYPICAL ELECTRICAL DETAILS

SHEET: E4.03

PROJECT 21052

STATE OF CALIFORNIA
Outdoor Lighting
NRCC-LTO-E (Created 11/19) CALIFORNIA ENERGY COMMISSI19

CERTIFICATE OF COMPLIANCE		NRCC-LTO-E
Project Name: Madera Unified School District Server Room	Report Page:	Page 3 of 6
Project Address: 1902 Howard Road Madera, CA. 93637	Date Prepared:	6-17-2021

G. CUTOFF REQUIREMENTS (BUG)

This Section Does Not Apply

H. OUTDOOR LIGHTING CONTROLS

Table Instructions: Complete this table demonstrating compliance with controls requirements for all new or altered luminaires installed as part of the permit application. For alteration projects, luminaires which are existing to remain (ie untouched) and luminaires which are removed and reinstalled (wiring only) do not need to be included in this table even if they are within the spaces covered by the permit application.
*When an option having a * is selected, the notes section of this table must be completed. The lighting controls section of the Compliance Summary Table on the first page will show "DOES NOT COMPLY" if the notes are left blank. For each requirement in columns 02 through 04, do not leave the field blank, instead select NA or Exempt* from the dropdown list to indicate not applicable or an exemption.*

Mandatory Controls

01	02	03	04	05	
Area Description	Shut-Off §130.2(c)1	Auto-Schedule §130.2(c)2	Motion Sensor §130.2(c)3	Field Inspector	
				Pass	Fail
HARDSCAPE	Photocontrol	Yes	Exempt *	☐	☐

*NOTES: Controls with a * require a note in the space below explaining how compliance is achieved.
EX: Not permitted by health & safety to be turned off; EXCEPTION 1 to §130.2(c).

HARDSCAPE	EXCEPTION 1 to Section 130.2(c)3: Luminaires with a maximum rated wattage of 40 watts each are not required to have motion sensing controls

Reset | Add Row | Remove Last

I. LIGHTING POWER ALLOWANCE (per §140.7)

Table Instructions: Please complete this table for areas using the allowance calculations per §140.7. General Hardscape Allowance is per Table 140.7-A while "Use it or lost it" Allowances are per Table 140.7-B. Indicate which allowances are being used to expand sections for user input. Luminaires that qualify for one of the "Use it or lose it" allowances shall not qualify for another "Use it or lose it" allowance.

	01			
		"Use it or lose it" Allowances (select all that apply)		
General Hardscape Allowance	☑ Per Application	☐ Sales Frontage	☐ Ornamental	☐ Per Specific Area
Table I (below)	Table J	Table K	Table L	Table M
Calculated General Hardscape Lighting Power Allowance per Table 140.7-A (LZ 2 & 3)				

Table Continued

STATE OF CALIFORNIA
Outdoor Lighting
NRCC-LTO-E (Created 11/19) CALIFORNIA ENERGY COMMISSION

CERTIFICATE OF COMPLIANCE		NRCC-LTO-E
This document is used to demonstrate compliance with requirements in §110.9, §130.0, §130.2, §140.7, and §141.0(b)2L for outdoor lighting scopes using the prescriptive path.		
Project Name: Madera Unified School District Server Room	Report Page:	Page 1 of 6
Project Address: 1902 Howard Road Madera, CA. 93637	Date Prepared:	6-17-2021

A. GENERAL INFORMATION

01	Project Location (city)	Madera	04 Total Illuminated Hardscape Area (ft^2)	896.4
02	Climate Zone	13		
03	Outdoor Lighting Zone per Title 24, Part 1 §10-114 or as designated by Authority Having Jurisdiction (AHJ):			
☐ LZ-0: Very Low - Undeveloped Parkland	☐ LZ-2: Moderate - Rural Areas	☐ LZ-4: High - Must be reviewed by CA Energy Commission for Approval		
☐ LZ-1: Low - Developed Parkland	☑ LZ-3: Moderately High - Urban Areas			

B. PROJECT SCOPE

Table Instructions: Include any outdoor lighting systems that are within the scope of the permit application and are demonstrating compliance using the prescriptive path outlined in §140.7 or §141.0(b)2L for alterations.

My project consists of:

01	02	
☐ New Lighting System	Must Comply with Allowances from §140.7.	
☑ Altered Lighting System	Is your alteration increasing the connected lighting load (Watts)?	◉ Yes ○ No
03	04	05
% of Existing Luminaires Being Altered[1]	Sum Total of Luminaires Being Added or Altered	Calculation Method

Please proceed to Table F. Outdoor Lighting Fixture Schedule to define the project's luminaires.

[1] FOOTNOTES: % of Existing Luminaires Being Altered = (Sum Total of Luminaires Being Added or Altered / Existing Luminaires within the Scope of the Permit Application) x 100

C. COMPLIANCE RESULTS

Table Instructions: If any cell on this table says "DOES NOT COMPLY" or "COMPLIES with Exceptional Conditions" refer to Table D. for guidance.

Calculation of Total Allowed Lighting Power (Watts) §140.7 or §141.0(b)2L												Compliance Results		
01		02		03		04		05		06		07		08	09
General Hardscape Allowance §140.7(d)1	+	Per Application §140.7(d)2	+	Sales Frontage §140.7(d)2	+	Ornamental §140.7(d)2	+	Per Specific Area §140.7(d)2	OR	Existing Power §141.0(b)2L	=	**Total Allowed** (Watts)	≥	**Total Actual** (Watts)	**07 Must be ≥ 08**
(See Table I)		(See Table J)		(See Table K)		(See Table L)		(See Table M)		(See Table N)				(See Table F)	
52.51	+		+		+		+		OR		=	52.51	≥	44	**COMPLIES**
Cutoff Compliance (See Table G for Details)												**Not Applicable**			
Controls Compliance (See Table H for Details)												**COMPLIES with Exceptional Conditions**			

STATE OF CALIFORNIA
Outdoor Lighting
NRCC-LTO-E (Created 11/19) CALIFORNIA ENERGY COMMISSI19

CERTIFICATE OF COMPLIANCE		NRCC-LTO-E
Project Name: Madera Unified School District Server Room	Report Page:	Page 4 of 6
Project Address: 1902 Howard Road Madera, CA. 93637	Date Prepared:	6-17-2021

02	03	04	05	06	07	08	09	10
Area Description	Surface Type	Area Wattage Allowance (AWA)			Linear Wattage Allowance (LWA)			Total General AWA + LWA (Watts)
		Illuminated Area (ft^2)	Allowed Density (W/ft^2)	Area Allowance (Watts)	Perimeter Length (lf)	Allowed Density (W/lf)	Linear Allowance (Watts)	
HARDSCAPE	Asphalt	896.4	0.025	22.41	120.4	0.25	30.1	52.51
								0
						Reset	Add Row	Remove Last
Initial Wattage Allowance for Entire Site (Watts):								
Total General Hardscape Allowance (Watts):								**52.51**

J. LIGHTING ALLOWANCE: PER APPLICATION

This Section Does Not Apply

K. LIGHTING ALLOWANCE: SALES FRONTAGE

This Section Does Not Apply

L. LIGHTING ALLOWANCE: ORNAMENTAL

This Section Does Not Apply

M. LIGHTING ALLOWANCE: PER SPECIFIC AREA

This Section Does Not Apply

N. EXISTING CONDITIONS POWER ALLOWANCE (alterations only)

This Section Does Not Apply

STATE OF CALIFORNIA
Outdoor Lighting
NRCC-LTO-E (Created 11/19) CALIFORNIA ENERGY COMMISSI19

CERTIFICATE OF COMPLIANCE		NRCC-LTO-E
Project Name: Madera Unified School District Server Room	Report Page:	Page 2 of 6
Project Address: 1902 Howard Road Madera, CA. 93637	Date Prepared:	6-17-2021

D. EXCEPTIONAL CONDITIONS

This table is auto-filled with uneditable comments because of selections made or data entered in tables throughout the form.

Table H. Outdoor Lighting Controls Permit Applicant Notes:
HARDSCAPE: EXCEPTION 1 to Section 130.2(c)3: Luminaires with a maximum rated wattage of 40 watts each are not required to have motion sensing controls
Selections made in Table O have been changed by the permit applicant. See Table E. Additional Remarks for permit applicant's explanation.

E. ADDITIONAL REMARKS

This table includes remarks made by the permit applicant to the Authority Having Jurisdiction.

F. OUTDOOR LIGHTING FIXTURE SCHEDULE

Table Instructions: For new or altered lighting systems demonstrating compliance with §140.7 (ie Table I has expanded for input), include all luminaires being installed and any existing luminaires remaining or being moved within the spaces covered by the permit application in the Table below. For altered lighting systems using the Existing Power method per §141.0(b)2L (ie Table N has expanded for input), include only new luminaires being installed and replacement luminaires being installed as part of the project scope (ie, do not include existing luminaires remaining or existing luminaires being moved).

Designed Wattage:

01	02		03	04	05	06	07	08	09	10	
Name or Item Tag	Complete Luminaire Description		Watts per luminaire[1,2]	How Wattage is determined	Total number luminaires[2]	Luminaire Status[3]	Excluded per §140.7(a)	Design Watts	Cutoff Req. ≥ 6,200 initial lumen output §130.2(b)[4]	Field Inspector	
										Pass	Fail
E	2,647 Lumens LED	☐ Linear	22	Mfr. Spec[1]	2	New	☐	44	NA: <6,200 lume	☐	☐
Total Designed Watts:								**44**			

* NOTES: Selections with a * require a note in the space below explaining how compliance is achieved.
EX: Luminaire is lighting a statue; EXCEPTION 2 to §130.2(b).

Reset | Add Row | Remove Last

[1] FOOTNOTES: Authority Having Jurisdiction may ask for Luminaire cut sheets to confirm wattage used for compliance per §130.0(c)
[2] For linear luminaires, wattage should be indicated as W/lf instead of Watts/luminaire. Total linear feet for the luminaire should be indicated in column 05 instead of number of luminaires.
[3] Select "New" for new luminaires in a new outdoor lighting project or for added luminaires in an alteration. Select "Altered" for replacement luminaires in an alteration. Select "Existing to Remain" for existing luminaires within the project scope that are not being altered and are remaining. Select "Existing Reinstalled" for existing luminaires which are being removed and reinstalled as part of the project scope
[4] Compliance with mandatory cutoff requirements is required for luminaires with initial lumen output ≥ 6,200 unless exempted by §130.2(b).

Borrelli & Associates, Inc.
Consulting Electrical Engineers
2032 N. Gateway Boulevard
Fresno, CA. 93727
Phone: 559-233-4138
http://www.borrelliengineering.com/
ca-bai@borrelliengineering.com
BAI# 20141

REGISTERED PROFESSIONAL ENGINEER JOHN BORRELLI No.E16390 EXP. 6/30/23 ELECTRICAL STATE OF CALIFORNIA

APPROVALS:
APPLICATION #

REGISTERED PROFESSIONAL ENGINEER RYAN W. CARLSON M34846 Exp. 6-30-22 MECHANICAL STATE OF CALIFORNIA

DATE: 05-14-21

MADERA UNIFIED SCHOOL DISTRICT
SERVER ROOM
1902 HOWARD ROAD
MADERA, CA. 93637

CDS #: 20-65243

REVISIONS

LAWRENCE ENGINEERING GROUP
7084 N. Maple Ave., Suite 101
Fresno, CA 93720
(559) 431-0101
FAX (559) 431-1562

TITLE:
OUTDOOR LIGHTING
TITLE 24

SHEET:
E5.01

PROJECT 21052

G:\Educational\MaderaUSD\DistrictOffice\BackupGenerator\20141E5-01.dwg, 6/23/2022 11:28:19 AM, ARCH full bleed D (24.00 x 36.00 Inches)

STATE OF CALIFORNIA

Outdoor Lighting

NRCC-LTO-E (Created 11/19) CALIFORNIA ENERGY COMMISSI19

CERTIFICATE OF COMPLIANCE		NRCC-LTO-E
Project Name: Madera Unified School District Server Room	Report Page:	Page 5 of 6
Project Address: 1902 Howard Road Madera, CA. 93637	Date Prepared:	6-17-2021

O. DECLARATION OF REQUIRED CERTIFICATES OF INSTALLATION

Table Instructions: Selections have been made based on information provided in previous tables of this document. If any selection needs to be changed, please explain why in Table E. Additional Remarks. These documents must be provided to the building inspector during construction and can be found online at https://www.energy.ca.gov/title24/2019standards/2019_compliance_documents/Nonresidential_Documents/NRCI/

YES	NO	Form/Title	Field Inspector Pass	Field Inspector Fail
◉	○	NRCI-LTO-01-E - Must be submitted for all buildings.	☐	☐
○	◉	NRCI-LTO-02-E - Must be submitted for a lighting control system; or for an Energy Management Control System (EMCS), to be recognized for compliance.	☐	☐

P. DECLARATION OF REQUIRED CERTIFICATES OF ACCEPTANCE

Table Instructions: Selections have been made based on information provided in previous tables of this document. If any selection needs to be changed, please explain why in Table E. Additional Remarks. These documents must be provided to the building inspector during construction and must be completed through an Acceptance Test Technician Certification Provider (ATTCP). For more information visit: http://www.energy.ca.gov/title24/attcp/providers.html

YES	NO	Form/Title	Field Inspector Pass	Field Inspector Fail
◉	○	NRCA-LTO-02-A - Must be submitted for all outdoor lighting controls except for alterations where controls area added to ≤ 20 luminaires.	☐	☐

STATE OF CALIFORNIA

Outdoor Lighting

NRCC-LTO-E (Created 11/19) CALIFORNIA ENERGY COMMISSION

CERTIFICATE OF COMPLIANCE		NRCC-LTO-E
Project Name: Madera Unified School District Server Room	Report Page:	Page 6 of 6
Project Address: 1902 Howard Road Madera, CA. 93637	Date Prepared:	6-17-2021

DOCUMENTATION AUTHOR'S DECLARATION STATEMENT

I certify that this Certificate of Compliance documentation is accurate and complete

Documentation Author Name:	John Borrelli, PE	Documentation Author Signature:	
Company:	Borrelli and Associates, Inc.	Signature Date:	
Address:	2032 N. Gateway Boulevard	CEA/ HERS Certification Identification (if applicable):	
City/State/Zip:	Fresno, CA 93727	Phone:	559-233-4138

RESPONSIBLE PERSON'S DECLARATION STATEMENT

I certify the following under penalty of perjury, under the laws of the State of California:

1. **The information provided on this Certificate of Compliance is true and correct.**
2. **I am eligible under Division 3 of the Business and Professions Code to accept responsibility for the building design or system design identified on this Certificate of Compliance (responsible designer)**
3. **The energy features and performance specifications, materials, components, and manufactured devices for the building design or system design identified on this Certificate of Compliance conform to the requirements of Title 24, Part 1 and Part 6 of the California Code of Regulations.**
4. **The building design features or system design features identified on this Certificate of Compliance are consistent with the information provided on other applicable compliance documents, worksheets, calculations, plans and specifications submitted to the enforcement agency for approval with this building permit application.**
5. **I will ensure that a completed signed copy of this Certificate of Compliance shall be made available with the building permit(s) issued for the building, and made available to the enforcement agency for all applicable inspections. I understand that a completed signed copy of this Certificate of Compliance is required to be included with the documentation the builder provides to the building owner at occupancy.**

Responsible Designer Name:	John Borrelli, PE	Responsible Designer Signature:	
Company :	Borrelli and Associates, Inc.	Date Signed:	
Address:	2032 N. Gateway Boulevard	License:	E16390
City/State/Zip:	Fresno, CA 93727	Phone:	559-233-4138

Borrelli & Associates, Inc.
Consulting Electrical Engineers
2032 N. Gateway Boulevard
Fresno, CA. 93727
Phone: 559-233-4138
http://www.borrelliengineering.com/
ca-bai@borrelliengineering.com
BAI# 20141

REGISTERED PROFESSIONAL ENGINEER JOHN BORRELLI No.E16390 EXP. 6/30/23 ELECTRICAL STATE OF CALIFORNIA

APPROVALS:

APPLICATION #

REGISTERED PROFESSIONAL ENGINEER RYAN W. CARLSON M34846 Exp. 6-30-22 MECHANICAL STATE OF CALIFORNIA

DATE: 05-14-21

MADERA UNIFIED SCHOOL DISTRICT
SERVER ROOM
1902 HOWARD ROAD
MADERA, CA. 93637

CDS #: 20-65243

REVISIONS

LAWRENCE ENGINEERING GROUP
7084 N. Maple Ave., Suite 101
(559) 431-9101
Fresno, CA 93720
FAX (559) 431-1562

TITLE:
OUTDOOR LIGHTING
TITLE 24

SHEET:
E5.02

PROJECT 21052